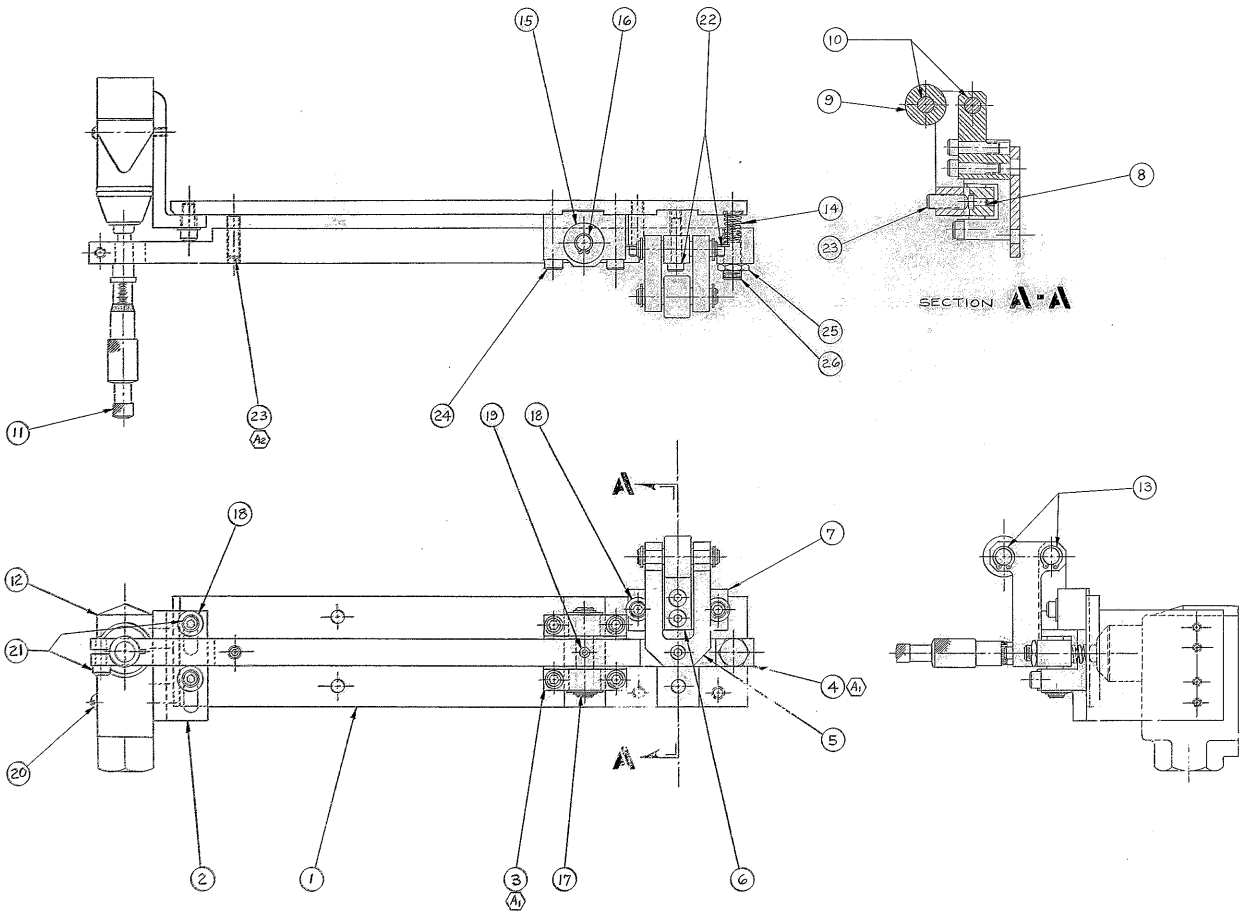

BILL OF MATERIAL

ITEM	QTY.	MATERIAL	DESCRIPTION	WEIGHT

~~5-BREAK SHARP EDGES~~

~~4-IDENTIFY BY _____ AT LOCATION 4 "AURA INC. MADE IN U.S.A."~~

~~3-STAMP MATCH MARKS ON ALL MATING PARTS WHERE NECESSARY.~~

2-PROJECT DRAWINGS _____

1-FOR NEXT ASSY. SEE 2150.130-E102 (2120-KD50)

NOTES-

LET.	REVISION	ECN.	DATE	BY
A	(1) REVERSED ITEM NOS. (8) & (9)	0842	1-4-73	[illegible]
	(2) ADDED ANOTHER SCREW ITEM (23)			

TOLERANCES UNLESS OTHERWISE NOTED

DECIMAL DIMENSIONS
00.00 ±.010
00.000 ±.003

FRACTIONAL DIMENSIONS
UP TO 18" ± 1/64
18" TO 60" ± 1/32
60" & OVER ± 1/16

ANGLES ± 0°-30'

ALL SURFACES 125 TO HAVE FINISH UNLESS OTHERWISE NOTED.

KITT PEAK NATIONAL OBSERVATORY

OPERATED BY THE
ASSOCIATION OF UNIVERSITIES FOR RESEARCH IN ASTRONOMY, INC.
UNDER CONTRACT WITH
NATIONAL SCIENCE FOUNDATION

150 INCH STELLAR TELESCOPE — REF. FILE 1156

NAME: THRUST BEARING PAD LIMIT SWITCH ASSY-INNER L.H.

SCALE: FULL

PRINT ISSUED

DESIGNED BY F. HENDY	DATE 6-26-72	REVIEWED BY T. WINDOW	DATE 2-25-73	DRAWING NUMBER 2150.130-D302
DRAWN BY D. L. S.	DATE 3-21-72	APPROVED BY [illegible]	DATE 2-27-73	REV. A
CHECKED BY J. SINGLEY	DATE 9-29-72	APPROVED BY	DATE	

5/71 DIETZGEN-VAN DYCK CLEARPRINT 1020