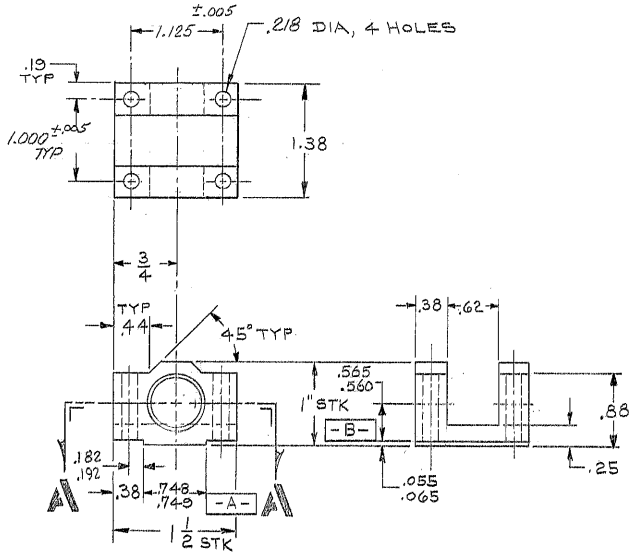

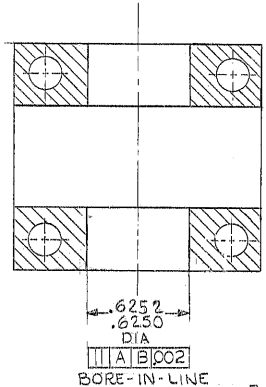

SECTION A-A
SCALE: DOUBLE SIZE

MATL: AL. 1 x 1 1/2 BAR STK

5-FINISH: ANODIZE
4-BREAK SHARP EDGES .01
~~3-IDENTIFY BY _____ AT LOCATION -3- "AURA-INC.-MADE-IN-U.S.A."~~
~~2-STAMP MATCH MARKS ON ALL MATING PARTS WHERE NECESSARY.~~
1-FOR NEXT ASSY. SEE 2150.130-D302 & -D402
NOTES:

LET.	REVISION ON	ECR	DATE	BY

TOLERANCES UNLESS OTHERWISE NOTED
DECIMAL DIMENSIONS 00.00 ±.010 00.000 ±.003
FRACTIONAL DIMENSIONS UP TO 18" ± 1/64 18" TO 60" ± 1/32 60" & OVER ± 1/16
ANGLES ± 0° -30'
ALL SURFACES TO HAVE 125 FINISH UNLESS OTHERWISE NOTED.

DES'D BY H. HENDY DATE 6-10-72 APP'D BY HHendy DATE 7-26-72
DRN BY D.L.B. DATE 7-24-72 APP'D BY DATE
CH'KD BY J. Shively DATE 7-31-72 APP'D BY DATE

KITT PEAK NATIONAL OBSERVATORY
OPERATED BY THE ASSOCIATION OF UNIVERSITIES FOR RESEARCH IN ASTRONOMY, INC. UNDER CONTRACT WITH NATIONAL SCIENCE FOUNDATION

150 INCH STELLAR TELESCOPE | REF. FILE 1156

NAME: BEARING MOUNT THRUST BEARING INNER L.S. ASSY

SCALE: FULL & HALF | PRINT ISSUED

DRAWING NUMBER: 2150.130-B 023 | REV.