REVISIONS				
ZONE	LTR	DESCRIPTION	DATE	APPROVED
	A	DRAWN PER AURA APPD CONST PRINT	5-2-68	

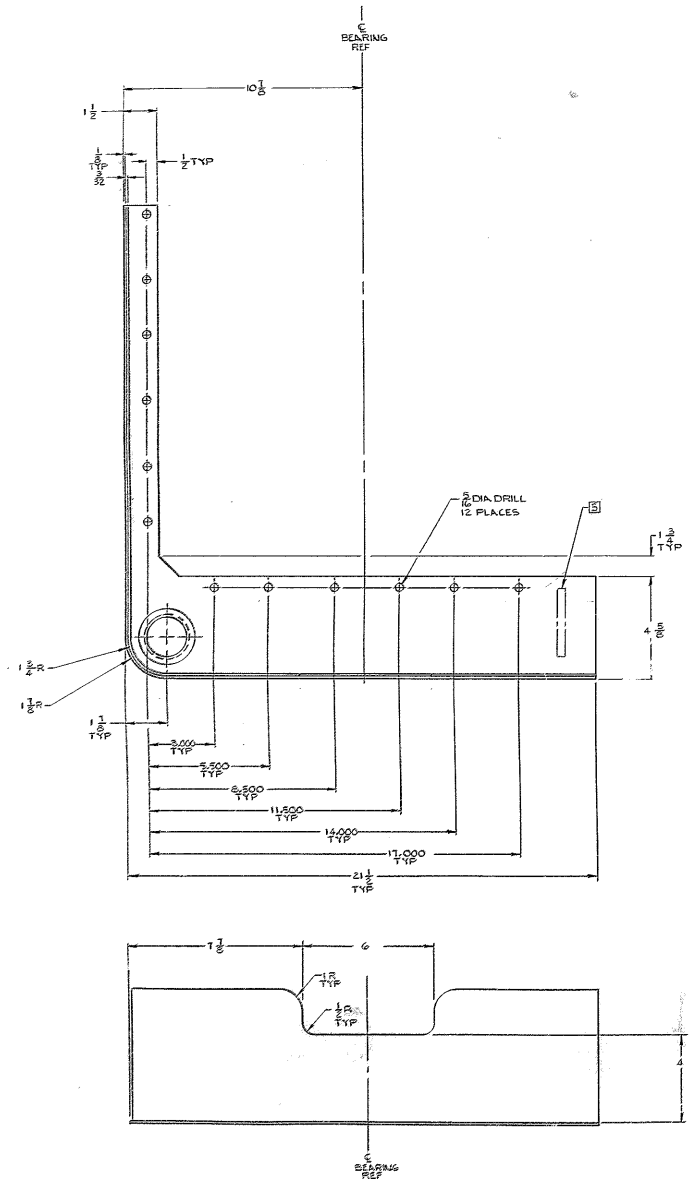

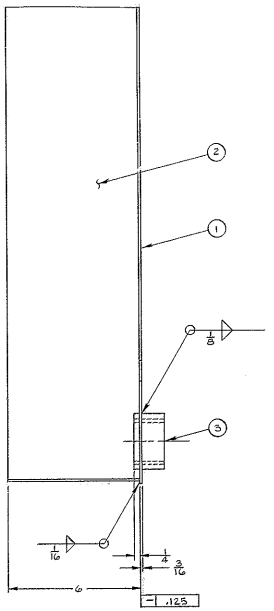

MATERIAL LIST				
PC. NO.	QTY	DESCRIPTION	MATL & SPEC	ROUGH WT
1	1	PL 21 1/2 x 3/16 x 21 1/2	STL ASTM A36	6.6
2	1	SHT 12 GA (1060) 6 x 44	STL AISI C1010	7.8
3	1	COUPLING, PIPE 1 1/2 NPT	STL	—

NOTES:
1 DIMENSIONS ARE IN INCHES.
2 FABRICATION TOLERANCE
UP TO 10 INCHES ± 1/16
10 TO 50 INCHES ± 1/8
3 WELD PER W.G.C. SPEC 752.
4 APPLY ONE 1 COAT PRIMER PAINT ALL OVER PER W.G.C. SPEC 511.
5 STAMP PART NO. 2150.120E 204 APPROX WHERE SHOWN.

WESTERN GEAR CORPORATION
CONSTRUCTION PROJECTS DEPARTMENT
APPROVED FOR PROCUREMENT
DATE 5/17/68

NEXT ASSY 2150.120E 202 (W.G.N 102 864)

N/ REF 1155

FIND NO.	PART NO.	DESCRIPTION	QTY	MATERIAL	CODE IDENT

LIST OF MATERIAL (LM)

LIMITS ON MACHINED DIMENSIONS EXCEPT AS NOTED
ANGULAR = ± 1° 0'
LINEAR
X = ± 1 .XX = ± .010
.XX = ± .03 FRACTIONAL = ± 1/32
BREAK ALL SHARP EDGES
MATERIAL
SEE MATL LIST

150 IN. STELLAR TELESCOPE MTG

DRAWN R. CARR MAY 68
CHECK
ENGR

W.G.N 103033
APPROVED

Western GEAR CORPORATION
HEAVY MACHINERY DIVISION
EVERETT, WASHINGTON

OIL PAN, L/H
SOUTH HYDROSTATIC BEARING

SIZE	CODE IDENT NO.		REV
E	16603	2150.120E 204	A

SCALE 1/2 WT 15.5 LB SHEET 1 OF 1