"THIS TECHNICAL DATA, FURNISHED UNDER UNITED STATES GOVERNMENT CONTRACT NO. SHALL NOT BE EITHER RELEASED OUTSIDE THE GOVERNMENT, OR USED, DUPLICATED, OR DISCLOSED IN WHOLE OR IN PART FOR MANUFACTURE OR PROCUREMENT, WITHOUT THE WRITTEN PERMISSION OF WESTERN GEAR CORPORATION EXCEPT FOR (I) EMERGENCY REPAIR OR OVERHAUL WORK BY OR FOR THE GOVERNMENT WHERE THE ITEM OR PROCESS CONCERNED IS NOT OTHERWISE REASONABLY AVAILABLE TO ENABLE TIMELY PERFORMANCE OF THE WORK OR (II) RELEASE TO A FOREIGN GOVERNMENT AS THE INTERESTS OF THE UNITED STATES MAY REQUIRE, PROVIDED THAT IN EITHER CASE THE RELEASE, USE, DUPLICATION OR DISCLOSURE HEREOF SHALL BE SUBJECT TO THE FOREGOING LIMITATIONS. THIS LEGEND SHALL BE MARKED ON ANY REPRODUCTION HEREOF IN WHOLE OR IN PART."

REVISIONS				
ZONE	LTR	DESCRIPTION	DATE	APPROVED

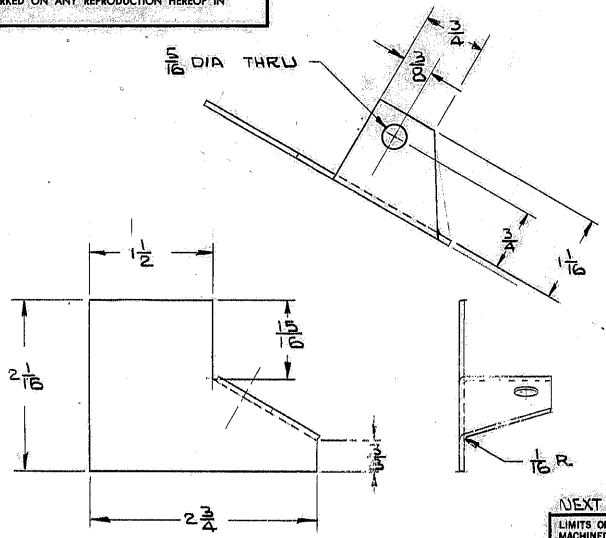

NOTES
1. MAT'L STL H.R
16 GA (.059) x 2 1/16 x 2 3/4.
2. STL STAMP P/N 2150.110B015.
3. APPLY 1 COAT OF PRIME PAINT.

NEXT ASSY 2150.110E102
2150.111E102

REF. FILE 1154

LIMITS ON MACHINED DIMENSIONS EXCEPT AS NOTED ANGULAR ± 1° 0' LINEAR X = ± .1 XX = ± .03 XXX = ± .010 FRACTIONAL ± 1/32 BREAK ALL SHARP EDGES	"50" STELLAR TELESCOPE	WESTERN GEAR CORPORATION	HEAVY MACHINERY DIVISION EVERETT, WASHINGTON
	DRAWN LDS	OIL DEFLECTOR	
	CHECK	NORTH RADIAL BEARING	
	ENGR SKILES	SIZE B / CODE IDENT NO. 16603 / 2150.110B015	REV
	APPROVED	SCALE FULL / WT. LB	SHEET / OF /

P-1336