THIS DOCUMENT CONTAINS INFORMATION PROPRIETARY TO WESTERN GEAR CORPORATION. ALL DESIGN MANUFACTURING, REPRODUCTION, USE, PATENT, AND SALES RIGHTS REGARDING THE SAME ARE HEREBY EXPRESSLY RESERVED BY WESTERN GEAR CORPORATION. THIS DOCUMENT IS SUBMITTED FOR REFERENCE PURPOSES ONLY AND SHALL NOT BE DISCLOSED TO ANY UNAUTHORIZED PERSON OR INCORPORATED INTO ANY OTHER REPORT.

7 NOVEMBER 1969

REVISIONS				
ZONE	LTR	DESCRIPTION	DATE	APPROVE
TE	A	ADDED NOTE	7/6/73	

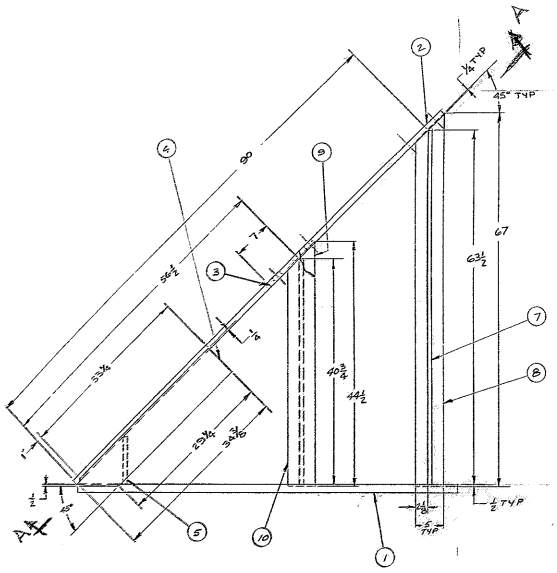

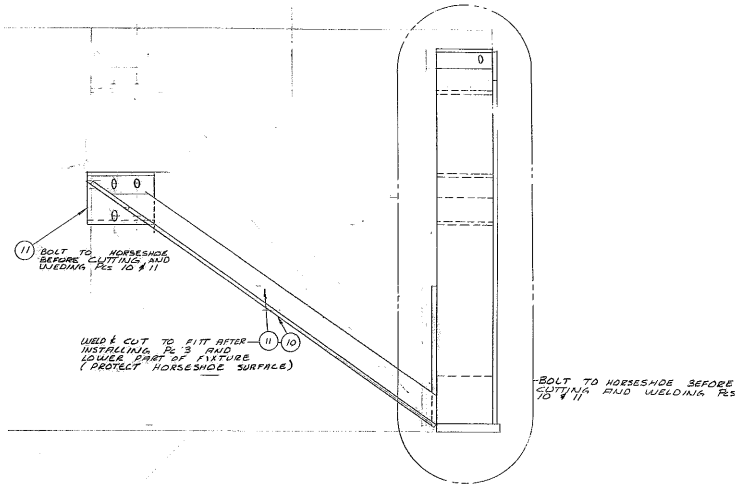

NOTE: WESTERN GEAR CORP. IS NOT RESPONSIBLE FOR LIFTING, WIRE ROPE SIZES, OR WIRE ROPE LENGTHS.

NOTE:
1. ALL WELDS 1/2 CONTINUOUS.
2. (16) 1 1/2 - 6 NC x 5 LG SOC HD CAPSCREWS.
   (16) 1 1/2 - 6 NC HEX NUT.
   (16) 1 1/2 DIA FLAT WASHER

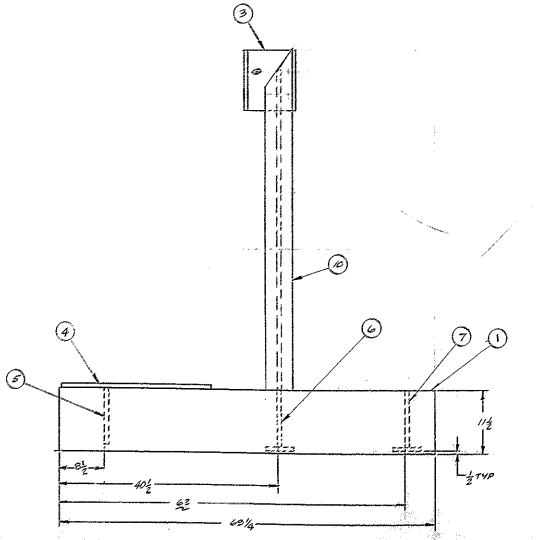

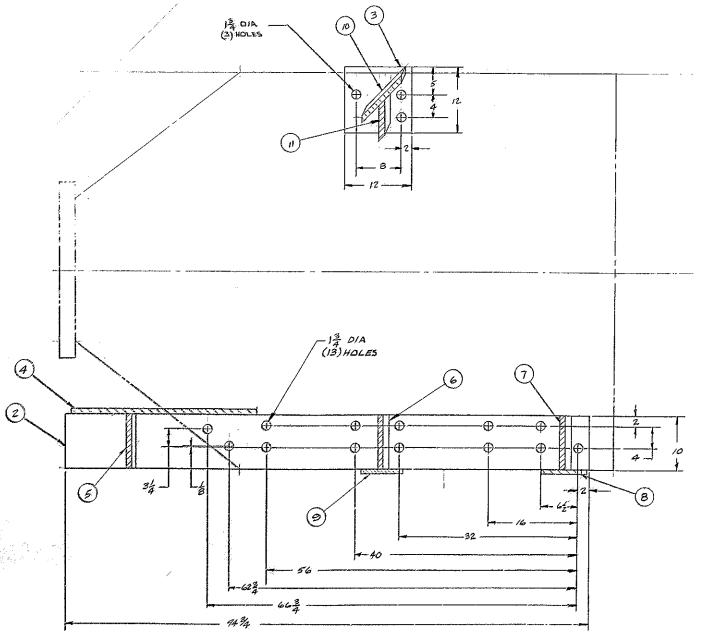

SECTION A-A
ROTATED 45° CLOCKWISE

AT SITE

1152

FIND NO.	PART NO.	DESCRIPTION	QTY	MATERIAL	CODE IDENT
11		3/4 x 4 x 71 1/4	1	STL ASTM A-36 OR EQUAL	
10		3/4 x 5 x 75 1/2	1		
9		3/4 x 5 x 44 1/2	1		
8		3/4 x 5 x 67	1		
7		3/4 x 10 x 63 1/2	1		
6		3/4 x 10 x 40 3/4	1		
5		1 x 8 1/2 x 10	1		
4		1 x 6 x 34 5/8	1		
3		1 x 12 x 12	1		
2		1 x 10 x 54 3/16	1		
1		1 1/4 x 11 1/4 x 60 1/2	1	STL ASTM A-36 OR EQUAL	

LIST OF MATERIAL (LM)

LIMITS ON MACHINED DIMENSIONS EXCEPT AS NOTED
ANGULAR = ± 1°0'
LINEAR:
X = ±.1 XXX = ± .010
XX = ± .03 FRACTIONAL = ± 1/32
BREAK ALL SHARP EDGES
MATERIAL

DRAWN	LDS	8-20-71
CHECK	LDS	8-20-71
ENGR	SKILES	8-20-71

APPROVED

WGE 300867

WESTERN GEAR CORPORATION
HEAVY MACHINERY DIVISION
EVERETT, WASHINGTON

WEST HORSESHOE LIFTING FIXTURE

SIZE	CODE IDENT NO.		REV
E	16603	2150.005E286	A

SCALE 1/8 WT LB SHEET 1 OF 1