BILL OF MATERIAL

ITEM	QTY.	MATERIAL	DESCRIPTION	WEIGHT

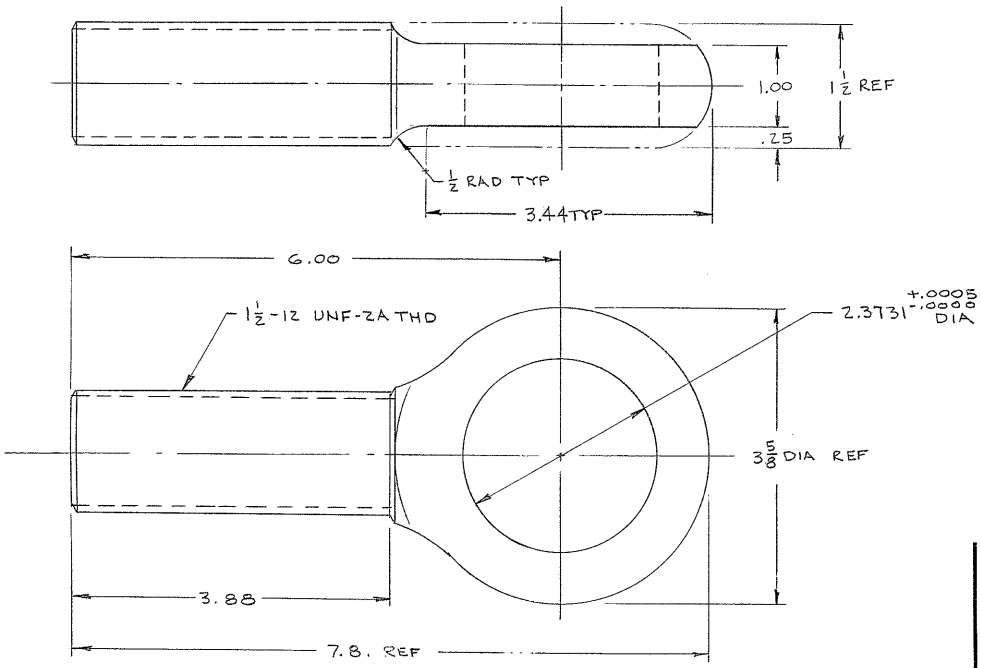

MAT'L: MAKE FROM CROSBY-LAUGHLIN ROD END # S-295 (1 1/2 SHANK)
REQ'D: 1 (EACH ASSY)
FINISH: CD PLATE

5-BREAK SHARP EDGES .03

~~4-IDENTIFY BY _____ AT LOCATION 4 , "AURA INC. MADE IN U.S.A."~~

~~3-STAMP MATCH MARKS ON ALL MATING PARTS WHERE NECESSARY.~~

2-PROJECT DRAWINGS _____

1-FOR NEXT ASSY. SEE 2150.251-E202, 2150.281-E302 & 2102-E16

NOTES-

LET.	REVISION	ECR	DATE	BY

TOLERANCES UNLESS OTHERWISE NOTED

DECIMAL DIMENSIONS
00.00 ± .010
00.000 ± .003

FRACTIONAL DIMENSIONS
UP TO 18" ± 1/64
18" TO 50" ± 1/32
50" & OVER ± 1/16

ANGLES ± 0° −30'

ALL SURFACES TO HAVE 125 √ FINISH UNLESS OTHERWISE NOTED.

KITT PEAK NATIONAL OBSERVATORY
OPERATED BY THE
ASSOCIATION OF UNIVERSITIES FOR RESEARCH IN ASTRONOMY, INC.
UNDER CONTRACT WITH
NATIONAL SCIENCE FOUNDATION

150" TELESCOPE

REF. FILE 1152

NAME ROD END - RH
HORSESHOE & TUBE STAY BARS

SCALE FULL

PRINT ISSUED

	DATE		DATE
DESIGNED BY J. B. Hoag	2-3-72	APPROVED BY R. B.	2-7-72
DRAWN BY J. B. Hoag	2-3-72	APPROVED BY	DATE
CHECKED BY E. CHADD.	2-10-72	APPROVED BY E.C.	2-7-72

DRAWING NUMBER 2150.005-C206

REV.

5/71 DIETERICH-POST CLEARPRINT 1020-10