BILL OF MATERIAL

ITEM	QTY.	MATERIAL	DESCRIPTION	WEIGHT
1	1	6061-T651	1/2 X 1 3/8 X 35 5/8 AL ALY BAR	0.6
2	1	6061-T651	1/8 X 2 3/8 X 72 5/8 AL ALY BAR	2.2
3	1	6061-T651	1/8 X 6 X 35 5/8 AL ALY BAR	1.4
4	1	6063-T5	3/4 X 3/4 X 1/8 EXTRUDED AL ALY CHANNEL	2.15
5	1	6061-T651	1/8 X 35 5/8 X 72 5/8 AL ALY PLATE	23.5
6	1	6061-T651	1/8 X 2 X 7 AL ALY BAR	0.2

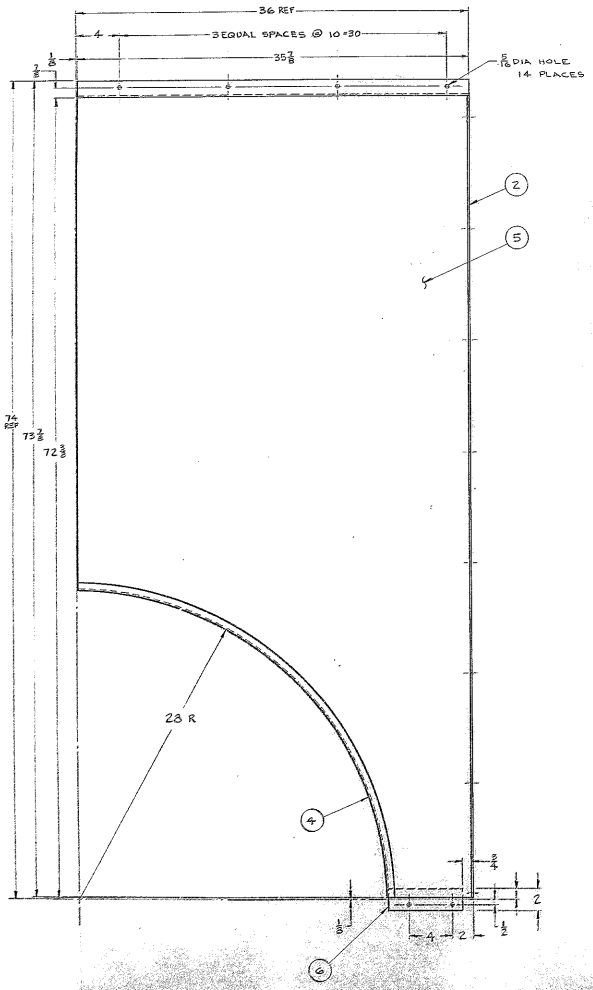

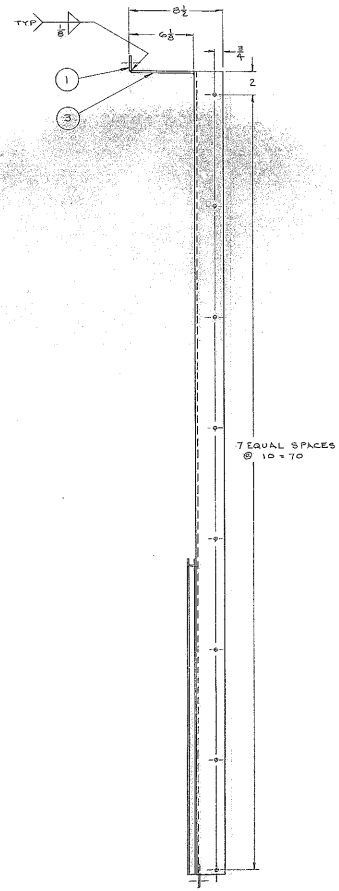

7. FINISH WITH TWO COATS ZINC CHROMATE PRIMER
6. ALL JOINTS 100% WELD
5-BREAK SHARP EDGES 1/32
4-IDENTIFY-BY ~~AT LOCATION~~ 4 "AURA INC. MADE IN U.S.A."
3-STAMP-MATCH MARKS ON ALL MATING PARTS WHERE NECESSARY.
2-PROJECT DRAWINGS
1-FOR NEXT ASSY. SEE 2150.014E002

NOTES-

LTR.	REVISION	ECR	DATE	BY

TOLERANCES UNLESS OTHERWISE NOTED
DECIMAL DIMENSIONS UP TO 1.0000 ± .005
OVER 1.0000 ± .003
FRACTIONAL DIMENSIONS UP TO 10" ± 1/64
10" TO 50" ± 1/32
50" & OVER ± 1/16
ANGLES ± 0° -30'
ALL SURFACES TO HAVE "B" FINISH UNLESS OTHERWISE NOTED.

KITT PEAK NATIONAL OBSERVATORY
OPERATED BY THE
ASSOCIATION OF UNIVERSITIES FOR RESEARCH IN ASTRONOMY, INC.
UNDER CONTRACT WITH
NATIONAL SCIENCE FOUNDATION

150" STELLAR TELESCOPE — REF. DWG. 115
NAME: UPPER PLATE-COVER, SOUTH, DEC DRIVE GEAR
SCALE 1/4
PRINT ISSUED

DRAWN BY	DATE	REVIEWED BY	DATE	DRAWING NUMBER	REV.
CB Mora	7-16-73	[illegible]	7-2-74	2150.004E021	
CHECKED BY	DATE	APPROVED BY	DATE		
[illegible]	8-10-73				
MANAGER BY	DATE	APPROVED BY	DATE		
[illegible]	11-5-74				