NOTES: UNLESS OTHERWISE SPECIFIED
1. REMOVE ALL BURRS AND SHARP EDGES .C30
2. MACHINED SURFACE ROUGHNESS 125
3. USE PIPE SEALANT (PERMATEX #82480) ON ALL PIPE JOINTS
4. PAINT ITEM #1 WITH SYNCLAIR INDUSTRIAL WHITE ENAMEL (OR EQ)

REVISIONS						
ZONE	LTR	REVISIONS	ECR	DATE	BY	APPV

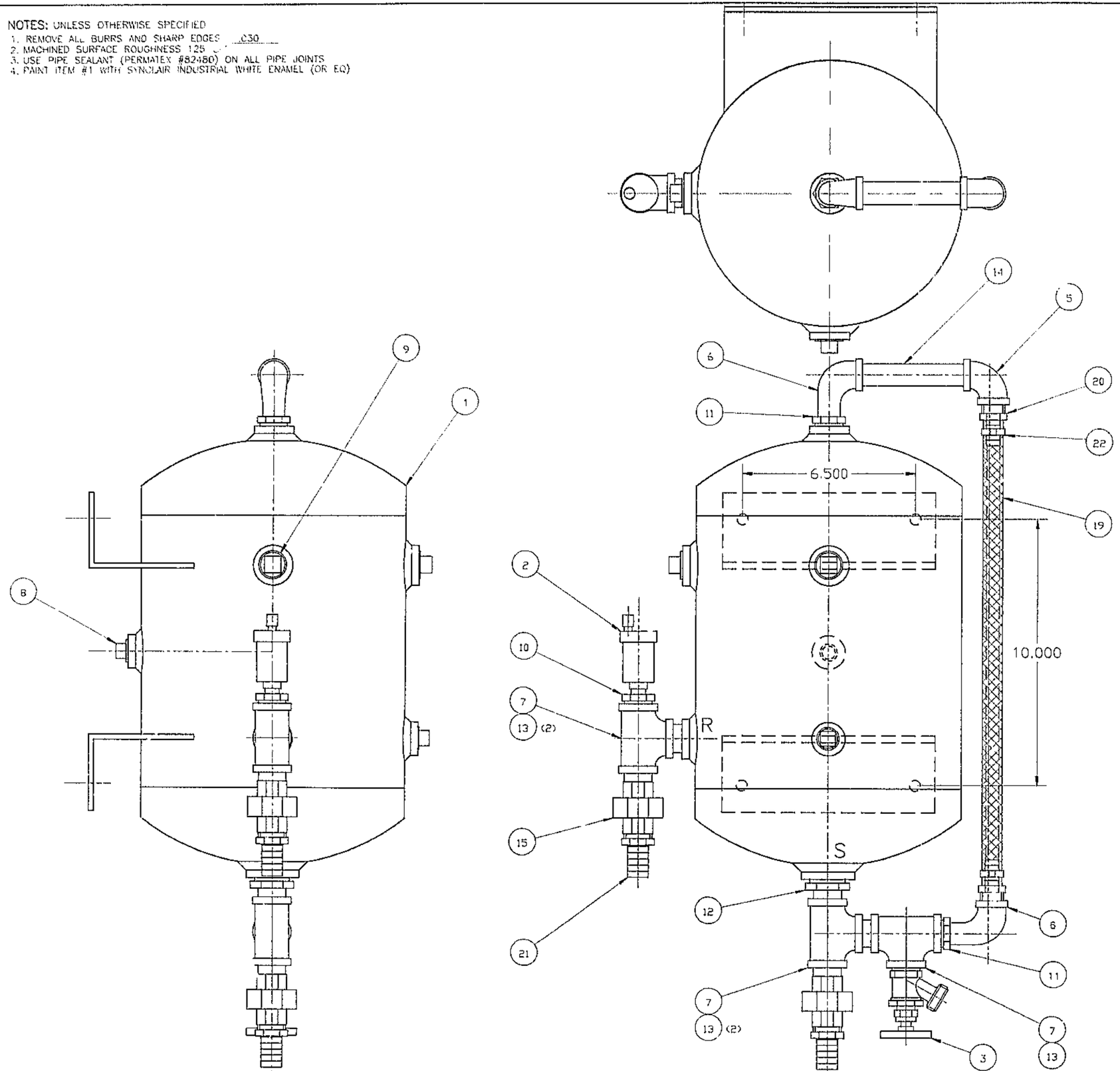

QTY REQD	PART OR IDENTIFYING NO	DESCRIPTION	MATERIAL/SPECIFICATION	ZONE	ITEM NO
					30
					29
					28
					27
					26
					25
					24
					23
2	1720	HOSE CLAMP-3/4" O.D. HOSE	OETIKER	C3	22
2		HOSE NIPPLE-3/4"HOSE X 3/4"IPS	BRASS	A5	21
2		HOSE NIPPLE-1/2"HOSE X 1/2"IPS	BRASS	C3	20
AS REQ'D		TUBING-REINFORCED, 1/2" I.D.	POLYURETHANE	C3	19
					18
					17
					16
2		UNION- 3/4"	GALV	A5	15
1		PIPE NIPPLE- 4 1/2"		A3	14
5		PIPE NIPPLE-CLOSE, 3/4"		B5	13
1		BUSHING-HEX,IPS 1" X 3/4"		A3	12
2		BUSHING-HEX,IPS 3/4" X 1/2"		A3	11
1		BUSHING-HEX,IPS 3/4" X 1/4"		B5	10
2		PLUG-SQ HD,3/4"IPS		C5	9
2		PLUG-SQ HD,1/2"IPS		B6	8
3		TEE-3/4"IPS		B5	7
2		90° STREET ELBOW-1/2"IPS		C4	6
1		90° ELBOW-1/2"IPS	GALV	C3	5
					4
1	5E390	DRAIN VALVE	NIBCO	A3	3
1	FV-4	AUTO FLOAT VENT-1/4"	WATTS	B5	2
1	06E2	AIR TANK-4.7 GAL	BRUNNER ENG & MFG.INC	C5	1

TOLERANCES UNLESS OTHERWISE NOTED
DECIMALS .XX ± .03 .XXX ± .010 | FRACTIONS ± — | ANGULAR ± 0°30'

NATIONAL OPTICAL ASTRONOMY OBSERVATORIES
OPERATED BY THE
ASSOCIATION OF UNIVERSITIES FOR RESEARCH IN ASTRONOMY
UNDER COOPERATIVE AGREEMENT WITH
NATIONAL SCIENCE FOUNDATION

NEXT ASSEMBLY: 2150.280E002

NAME: GLYCOL EXPANSION TANK

REF FILE: 1171

USED ON

SCALE	DESIGNED BY	DATE	APPROVED BY	DATE	DWG NO	REV
1/2			R.W.	11/5/95	2150.0007343D	
DRAWING PRODUCED USING AUTOCAD v.12	DRAWN BY J.HOEY	DATE 6/19/95	APPROVED BY	DATE		
PRINT ISSUED	CHECKED BY	DATE	APPROVED BY	DATE	RELEASED	SHEET OF