BILL OF MATERIAL

ITEM	QTY	MATERIAL	DESCRIPTION	REMARKS

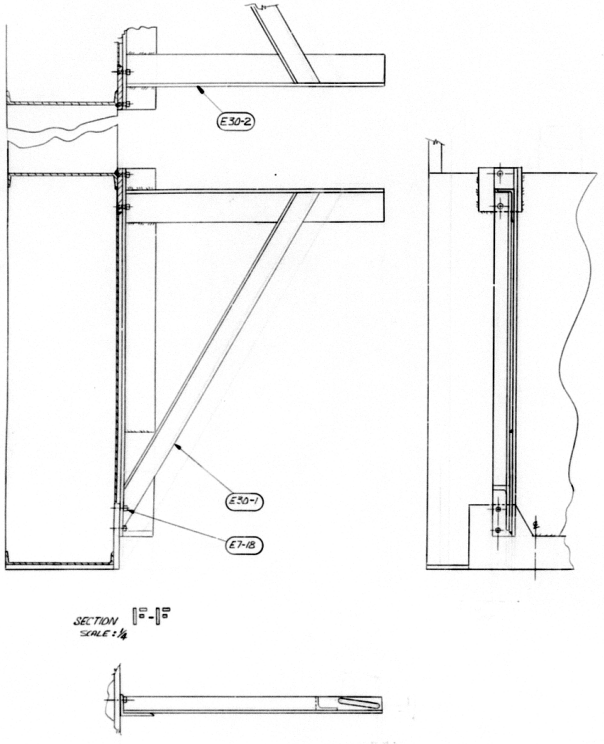

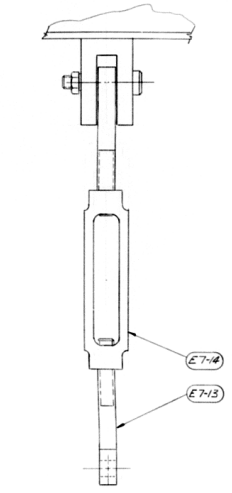

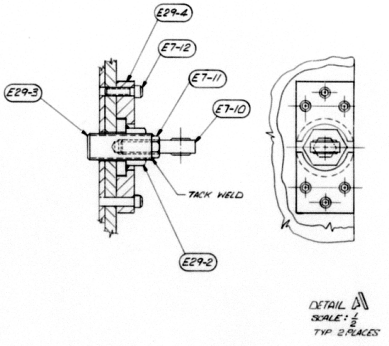

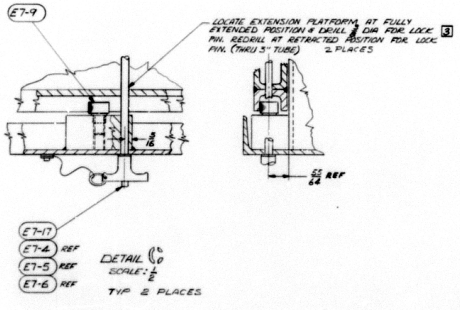

PRO ASSEMBLY USE

TOLERANCES UNLESS OTHERWISE SPECIFIED

DECIMAL DIMENSIONS
.XX ± .010
.XXX ± .005

FRACTIONAL DIMENSIONS
1/2 TO 36" ± 1/16
36" TO 60" ± 1/8
60" & OVER ± 1/4

SURFACE ROUGHNESS 125

ALL FINISHED TO 125/ FINISH

UNLESS OTHERWISE NOTED

KITT PEAK NATIONAL OBSERVATORY
OPERATED BY THE
ASSOCIATION OF UNIVERSITIES FOR RESEARCH IN ASTRONOMY, INC.
UNDER CONTRACT WITH
NATIONAL SCIENCE FOUNDATION

150 STELLAR TELESCOPE

NEXT ASSY 1239

PRIME FOCUS ACCESS PLATFORM ASSY

SCALE NOTED

DRAWING NUMBER 2141 E7

REV

SHEET #2 OF 2