BILL OF MATERIAL

ITEM	QTY.	MATERIAL	DESCRIPTION	REMARKS

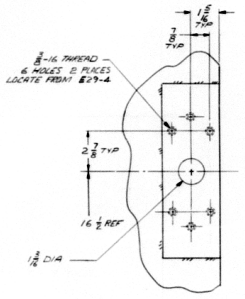

DETAIL H
SCALE: 1/2
TYP 2 PLACES

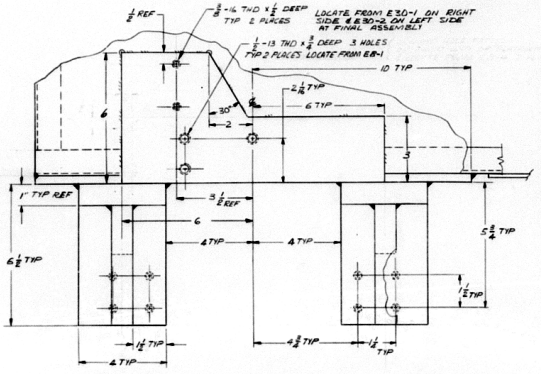

DETAIL G
SCALE: 1/2

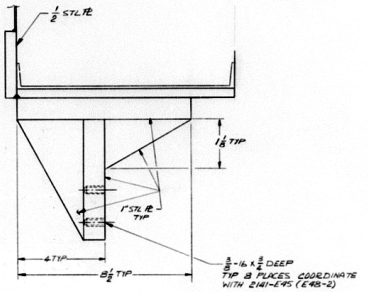

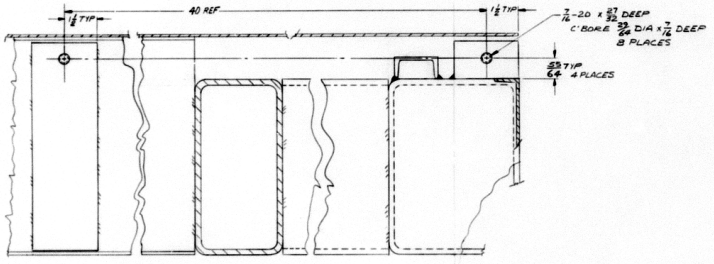

SECTION F-F
SCALE: 1/2

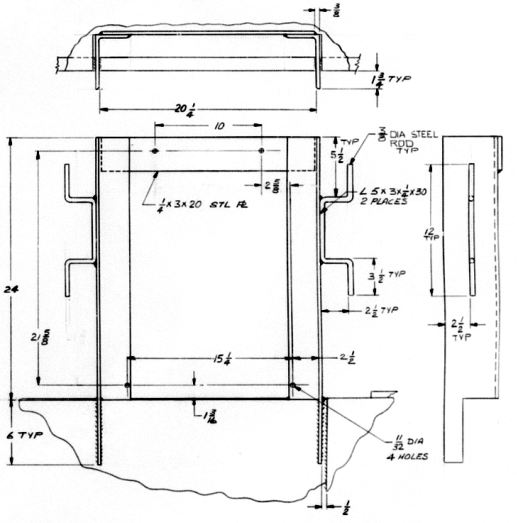

VIEW K-K ROTATED 180°
SCALE: 1/4

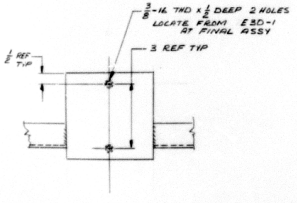

DETAIL J
SCALE: 1/2

FOR ASSEMBLY USE

TOLERANCES UNLESS OTHERWISE SPECIFIED
DECIMAL ± 0.010
FRACTIONAL ± 1/64
ANGULAR ± 1/2°
ALL DIMENSIONS TO BEGIN ✓ FINISH
MACHINE CHAMFER 0.03 x 45°

KITT PEAK NATIONAL OBSERVATORY
CREATED BY THE ASSOCIATION OF UNIVERSITIES FOR RESEARCH IN ASTRONOMY, INC. UNDER CONTRACT WITH NATIONAL SCIENCE FOUNDATION

150 STELLAR TELESCOPE
NAME: PLATFORM WELDMENT FOR P.F. ACCESS PLATFORM
NO. FILE 1223
SCALE 1/2 Mach
FINISH GRADE

DRAWN 2-21-67
CHECKED 2-21-67
ENGINEER 2-21-67
MANUFACTURING
DRAWING NUMBER 2141-E27
REV.
SHEET #2 of 2