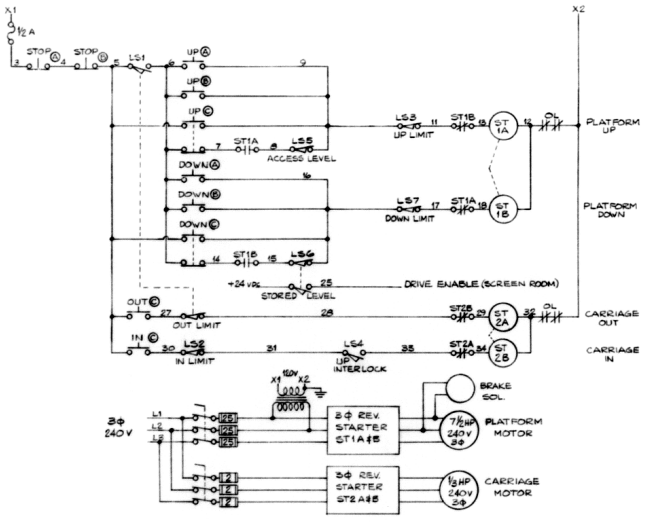

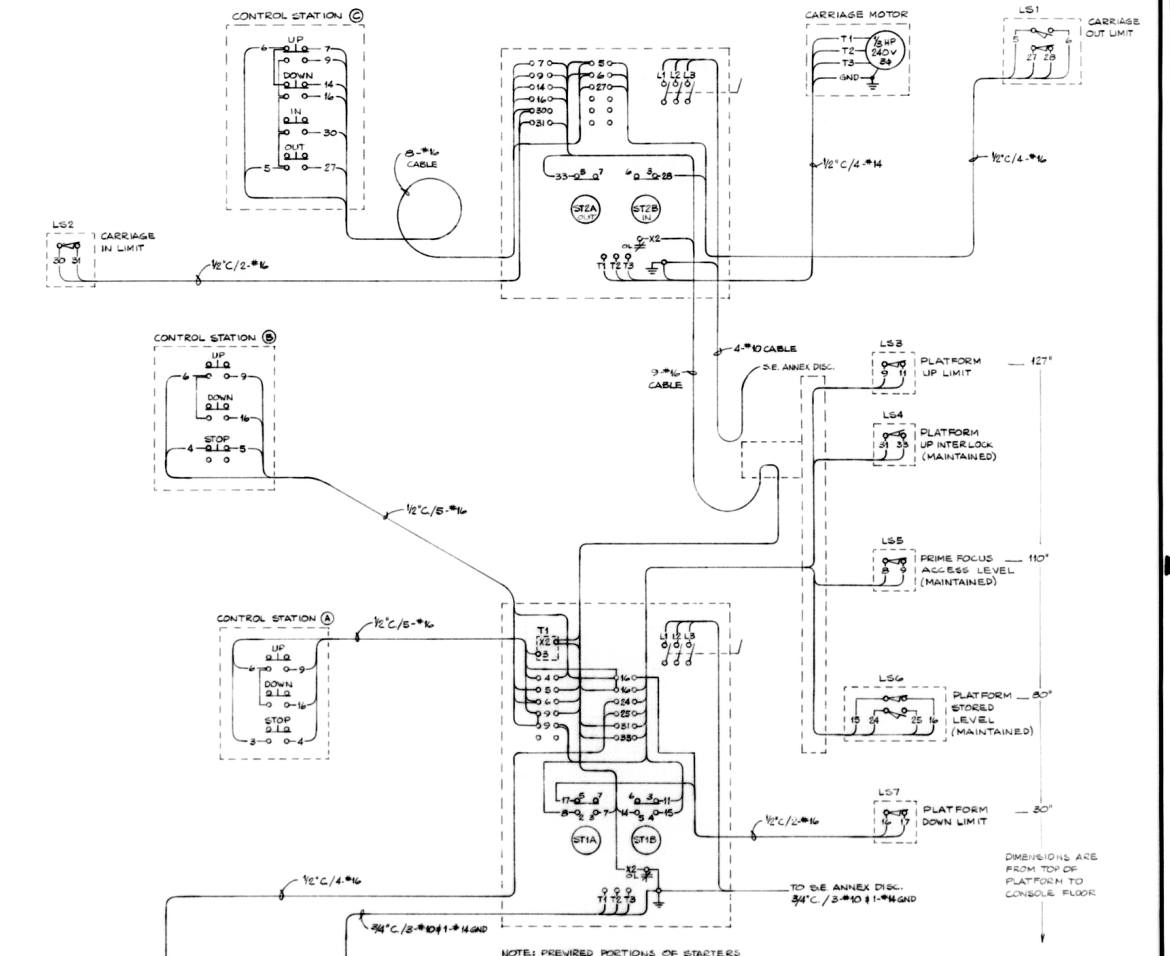

NEXT ASSY. 2141-E1 SHT 6

KITT PEAK NATIONAL OBSERVATORY

OPERATED BY THE ASSOCIATION OF UNIVERSITIES FOR RESEARCH IN ASTRONOMY, INC. UNDER CONTRACT WITH NATIONAL SCIENCE FOUNDATION

150" PRIME FOCUS HANDLING EQUIP.

REF. TM 1139

NAME: PLATFORM & CARRIAGE - CONTROL SCHEMATIC & WIRING DIAGRAM

SCALE: NONE

PRINT ISSUED

LET.	REVISION	ECR	DATE	BY
A	REMOVED STAYBAR LIMIT SWITCH	1198	21 MAY74	VR

DRAWN BY: VR 1-29-73 — CHECKED BY: W. COUSSELL 1-29-73 — APPROVED BY: 1-29-73 — APPROVED BY: DATE

DRAWING NUMBER: 2141-D10 — REV. A

KAC 1-29-73