BILL OF MATERIAL

ITEM	QTY.	MATERIAL	DESCRIPTION	WEIGHT
2141-E7-1	1		P.F. ACCESS PLATFORM ASSY	
2	1		ALUMINUM GRATING BEARING BAR SIZE 1X1/8,	
			RIVETED STD SPACE PATTERN, 48X115 DUCOMMUN	
3	2		BALL LOCK PIN 1/4 DIA CL-4-BLP-L-25 (CARR LANE)	
4	4		CABLE ADB-37005 (AMERICAN)	
5	4		#8-32 X 3/4 LG SOC HD CAP SCR	
6	4		#8 PLAIN WASHER	
7	20		1/2-13 X 1" LG SOC HD CAP SCR	
8	16		~~#6-32 X 3/8 LG SOC HD CAP SCR~~	
9	8		CAM FOLLOWER #CFH 5/8 MC GILL	
10	2		ROD END HMT-8G 1/2 BORE (UNIBAL)	
11	2		5/8-18 JAM NUT	
12	12		3/8-16 X 1 3/4 LG SOC HD CAP SCR	
13	2		SWING BOLT ADB 32.B10 (AMERICAN)	
14	1		TURNBUCKLE 5/8-10, 9" TAKE UP	
15	1		SHOULDER SCR 5/8 DIA 2 1/2 LG 9-1220-S6(DANLY)	
16	1		5/8-11 NUT	
17	2		BALL LOCK PIN 5/8 DIA CL-6-BLP-T-6.5 (CARR LANE)	
18	8		3/8-16 X 3/4 LG SOC HD CAP SCR.	
19	16		#8-32 X 1/2 LG SOC HD CAP SCR.	

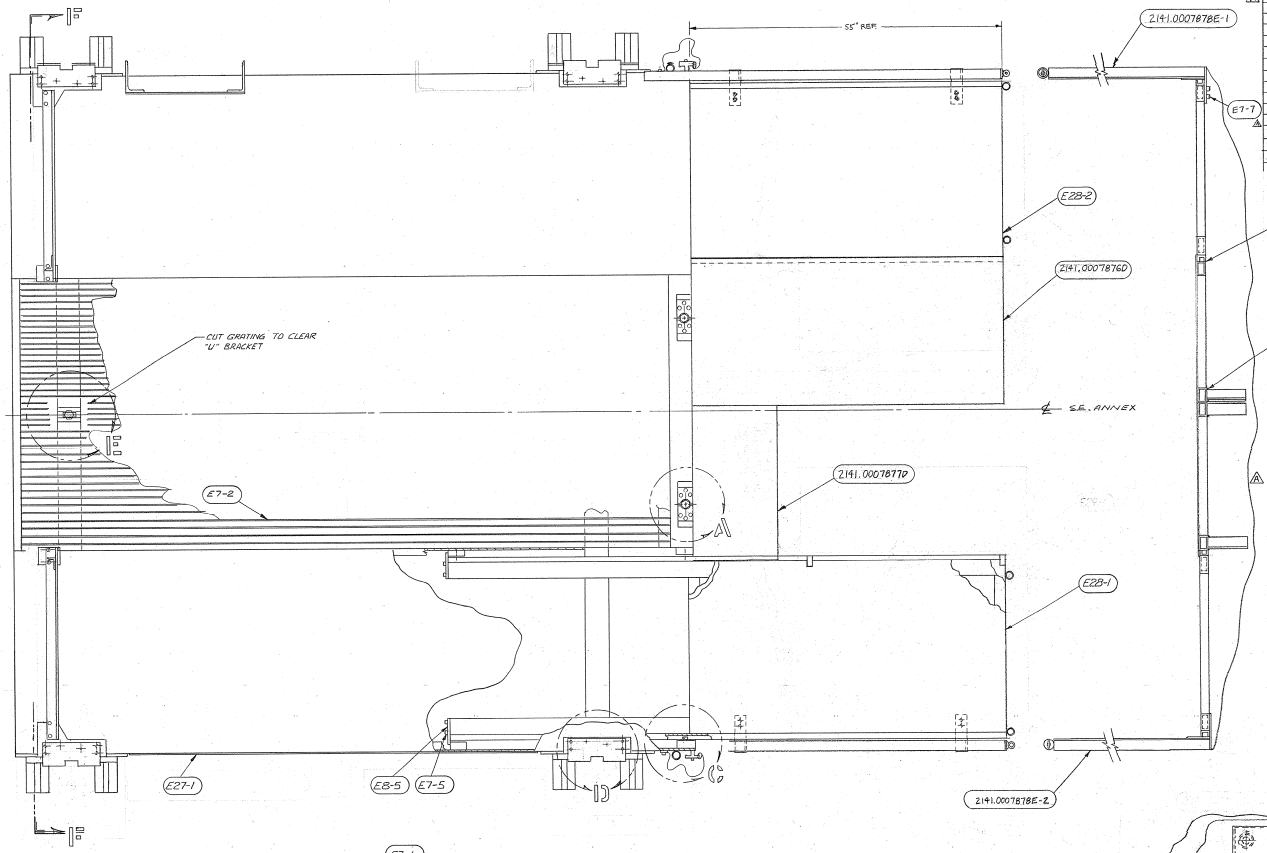

E7-1 P.F. ACCESS PLATFORM ASSY
1 REQ'D

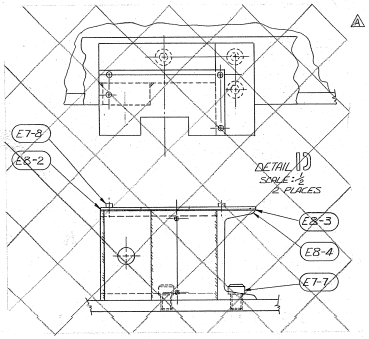

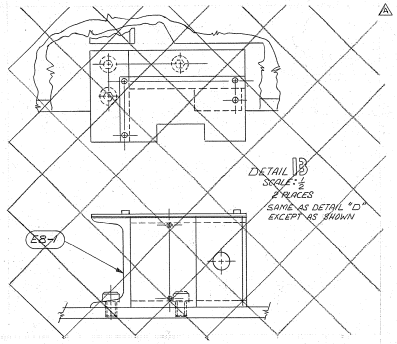

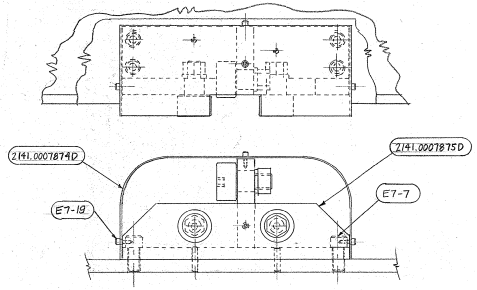

PROJECT DRAWINGS
~~2141-E20~~
2141-E27
2141-E28
2141-E29
2141-E7
2141.00078790
2141.00078750
2141.00078760
2141.00078770
2141.00078780

3 REMOVE ALL CHIPS & FOREIGN MATERIAL AFTER DRILLING.
2. PAINT PER SPECIFICATION AURA PROJECT # 41-0132-B

NOTES 1. FOR ASSEMBLY SEE 2141-E1

LET.	REVISION	ECR	DATE	BY
A	SEE ECR	3490	2-10-98	WRE

TOLERANCES UNLESS OTHERWISE NOTED
DECIMAL DIMENSIONS ±0.005 ±0.010 ±0.005
FRACTIONAL DIMENSIONS 10" TO 60" ± 1/64 60" TO 80" ± 1/32 80" & OVER ± 1/16
BREAK SHARP EDGES
ALL SURFACES 125 TO HAVE FINISH UNLESS OTHERWISE NOTED.

WT. 209.0 LB

KITT PEAK NATIONAL OBSERVATORY
OPERATED BY THE ASSOCIATION OF UNIVERSITIES FOR RESEARCH IN ASTRONOMY, INC.
UNDER CONTRACT WITH NATIONAL SCIENCE FOUNDATION

150 STELLAR TELESCOPE — REF. FILE 1239

NAME: PRIME FOCUS ACCESS PLATFORM ASSY

SCALE 1/2 & NOTED — PRINT ISSUED

DRAWING NUMBER: 2141-E7 — REV. A

DESIGNED BY: [illegible] DATE 6-28-78 — APPROVED BY: [illegible] DATE 6-23-78
DRAWN BY: [illegible] DATE 6-28-78 — APPROVED BY: [illegible] DATE 11-18-78
DESIGNED BY: [illegible] DATE 10-21-91 — APPROVED BY: DATE

SHEET # 1 OF 2

8/99 DIETERICH-POST CLEARPRINT 1020