NOTES: UNLESS OTHERWISE NOTED

1. ASSY NO & SERIAL NO TO BE MARKED IN 1/8 HIGH LETTERS IN BLACK INK. APPROX POSITION AS SHOWN.
2. —W— SYMBOL INDICATES SOLDERED CONNECTION TO GROUND PLANE (NOT SHOWN) ON COMPONENT SIDE.
3. ADJUST R8 FOR .31VDC AT PIN 3 OF COMPARATORS.
4. BY PASS +5 AT U6-14, U7-16, U8-16 & U9-14 — WITH C14, 15, 16 & 17.
5. GND PIN U7-3, U9-7 & PIN 1 OF U1 THRU U5.
6. WIRE PER SCHEMATIC USING 22 AWG SOLID SHIELDED WIRE
7.

74148 (U8) TRUTH TABLE

1	2	3	4	5	$\bar{A}_0$	$\bar{A}_1$	$\bar{A}_2$	SELECT GAIN
X	X	X	X	0	0	1	0	32
X	X	X	0	1	1	1	0	16
X	X	0	1	1	0	0	1	8
X	0	1	1	1	1	0	1	4
0	1	1	1	1	0	1	1	2
1	1	1	1	1	1	1	1	1

8. CAPACITORS ≥ 1UF ±20 %
<1UF ±10 %

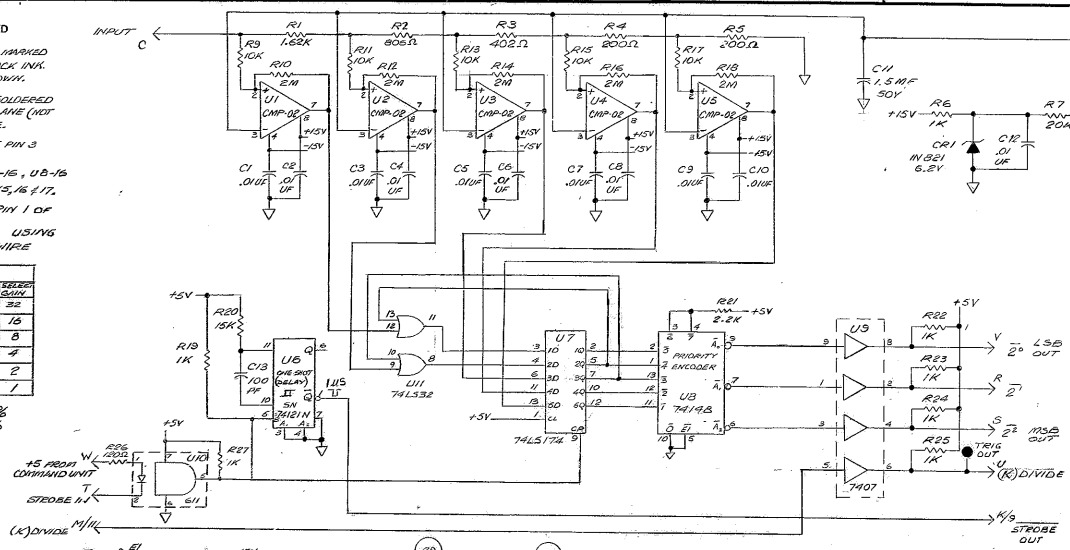

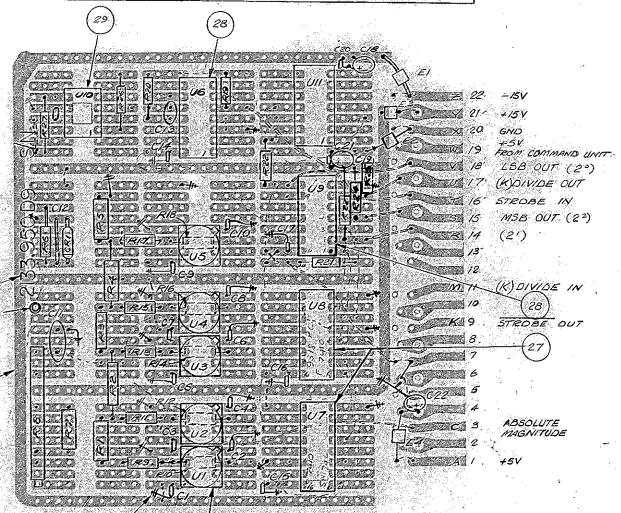

QTY REQD	PART OR IDENTIFYING NO.	DESCRIPTION	MATERIAL/SPECIFICATION	REF DES	ZONE	ITEM NO.
	4	FERRITE BEADS		E1-4		32
						31
1		RESISTOR 120Ω 1/4W		R26		30
1	ME2-8-1WG-B	SOCKET	SCANBE			29
2	ME2-14-1WG-B	SOCKET	SCANBE			28
2	ME2-16-1WG-B	SOCKET	SCANBE			27
5	7717-245	I.C. CONVERSION PAD	THERMALOY			26
5	C 930802	SOCKET	TEXAS INST			25
5		RESISTOR 2M 1/4W		R10,12,14,16,18		24
1		15K 1/4W		R20		23
5		10K 1/4W		R3,11,13,15,17		22
1		2.2K 1/4W		R21		21
6		1K 1/4W		R6,19,22-25,27		20
1		20K 1% METAL FILM		R7		19
2		200Ω		R4,5		18
1		402Ω		R3		17
1		806Ω		R2		16
1		RESISTOR 1.62K 1% METAL FILM		R1		15
1	1202-P	RESISTOR TRIMPOT 2K	VISHAY	R8		14
1	IN821	DIODE ZENER 6.2V		CR1		13
3		CAPACITOR 10UF 25V		C18,19,22		12
1		1.5MF 50V		C11		11
1		100 PF 5%		C13		10
17		CAPACITOR .01UF		C1-10,12,14-17,20,21		9
1	74LS32	QUAD 2 INPUT OR GATE		U11		8
1	7407	HEX BUFFER/DRIVER	TEXAS INST	U9		7
1	74148	8-INPUT PRIORITY ENCODER	FAIRCHILD	U8		6
1	SN74LS174	HEX D-FLIP FLOP	TEXAS INST	U7		5
1	SN74121N	ONE-SHOT	TEXAS INST	U6		4
5	CMP-02CU	OPERATIONAL AMP	PRECISION	U1-5		3
1	MCL-611	OPTO ISOLATOR	MONSANTO	U10		2
1	11DE-3GP	CIRCUIT BOARD	DOUGLAS			1

PARTS LIST

ZONE	LTR	DESCRIPTION	ECR	DATE	BY	APVD
	A	UPDATE	2423	9-19-75		DGS

REVISIONS

TOLERANCES UNLESS OTHERWISE NOTED
DECIMALS .XX ± .03 .XXX ± .010
FRACTIONS ± —
ANGULAR ± 0° 30'

NEXT ASSEMBLY 2133.920-D12

SCALE 2:1

PRINT ISSUED

4M TELESCOPE - FTS

KITT PEAK NATIONAL OBSERVATORY
OPERATED BY THE ASSOCIATION OF UNIVERSITIES FOR RESEARCH IN ASTRONOMY, INC. UNDER CONTRACT WITH NATIONAL SCIENCE FOUNDATION

NAME: COMPONENT CARD ASSY MAGNITUDE ENCODE & SYNC

REF FILE 1350 DWG CL

DWG NO. 2133.950 D9 REV A

DESIGNED BY T. Hallman DATE 1-6-75 APPROVED BY R. A. Boyd DATE 1-7-75
DRAWN BY J. Rodriguez DATE 1-6-75 APPROVED BY DATE
CHECKED BY DATE APPROVED BY DATE RELEASE DATE 3-9-76

FMC 3-9-76

(A15)

4/73 DIETERICH POST, CLEARWATER, 33519