NOTES: UNLESS OTHERWISE NOTED
1. REMOVE ALL BURRS AND SHARP EDGES .015 R OR CHAM
2. MACHINED SURFACE ROUGHNESS 125
3. ITEM 1 & 2 MADE FROM STD CHASSIS ITEM 13.

REVISIONS					
ZONE	LTR	DESCRIPTION	ECR	DATE	BY	APVD

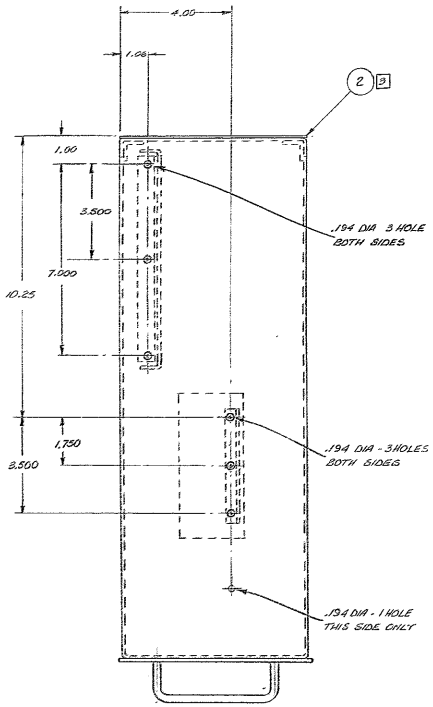

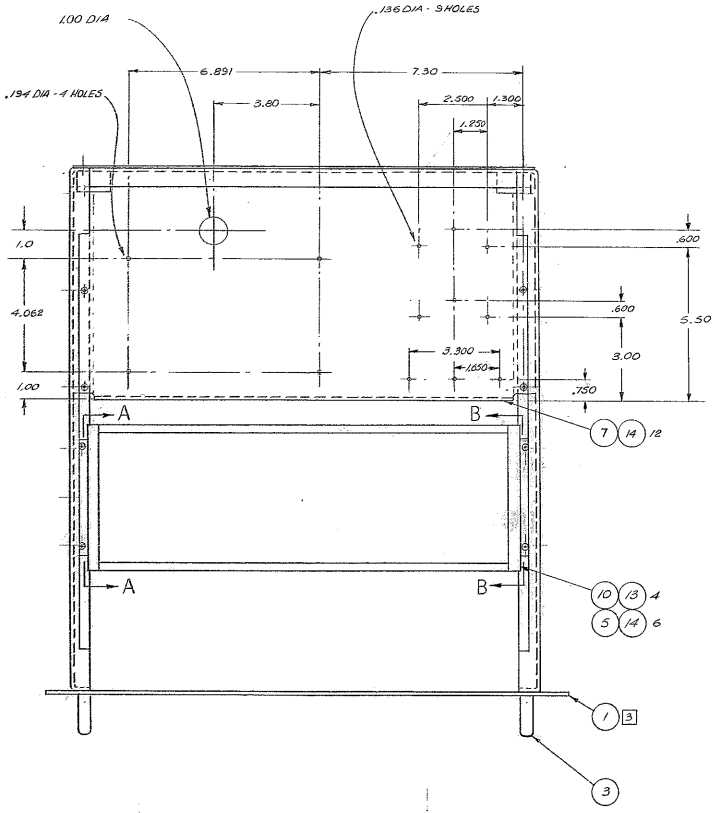

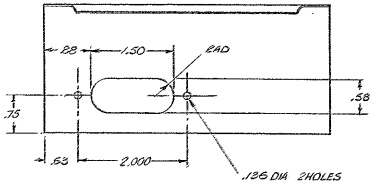

VIEW 'A-A'
SCALE 1/1
ROTATED 30°

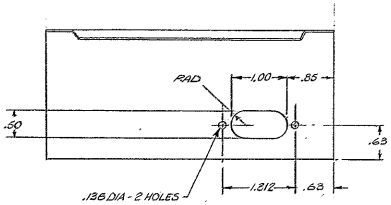

VIEW 'B-B'
SCALE 1/1
ROTATED 90°

QTY REQD	PART OR IDENTIFYING NO.	DESCRIPTION	MATERIAL/SPECIFICATION	ZONE	ITEM NO.
					20
					19
					18
					17
					16
					15
18		#8-32 x 3/8 LG PAN HD SCREW	BRASS/NI-PL		14
4		#6-32 x 5/8 LG PAN HD SCREW	BRASS/NI-PL		13
					12
					11
1	CPD	CARD RACK DATA TECH CO			10
2					9
2					8
1	8801-C004-5	PANEL - INSIDE ASSY			7
					6
2	8001-A14	MOUNTING BRACKET			5
					4
1	8801-C003	CHASSIS - STANDARD 7" x 19"			3
3	2133.920 D5	PANEL - REAR - MODIFICATION			2
3	2133.920 D6	PANEL - FRONT - MODIFICATION			1

PARTS LIST

TOLERANCES UNLESS OTHERWISE NOTED
DECIMALS .XX ± .03, .XXX ± .010
FRACTIONS ± —
ANGULAR ± 0° 30'

NEXT ASSEMBLY: 2133.920 D1E

4 M TELESCOPE COUDÉ

KITT PEAK NATIONAL OBSERVATORY
OPERATED BY THE ASSOCIATION OF UNIVERSITIES FOR RESEARCH IN ASTRONOMY, INC. UNDER CONTRACT WITH NATIONAL SCIENCE FOUNDATION

NAME: CHASSIS ASSY - ANALOG PROCESSOR 10 CM FTS
REF. FILE: 1350, 1445

SCALE 1/2 & NOTED
PRINT ISSUED

DESIGNED BY	DATE	APPROVED BY	DATE	DWG NO. 2133.920 D2
DRAWN BY	DATE	APPROVED BY	DATE	REV
CHECKED BY	DATE	APPROVED BY	DATE	RELEASED BY DATE

XBAC 3-9-76

1/74 DIETERICH-POST COURIPRINT 2005