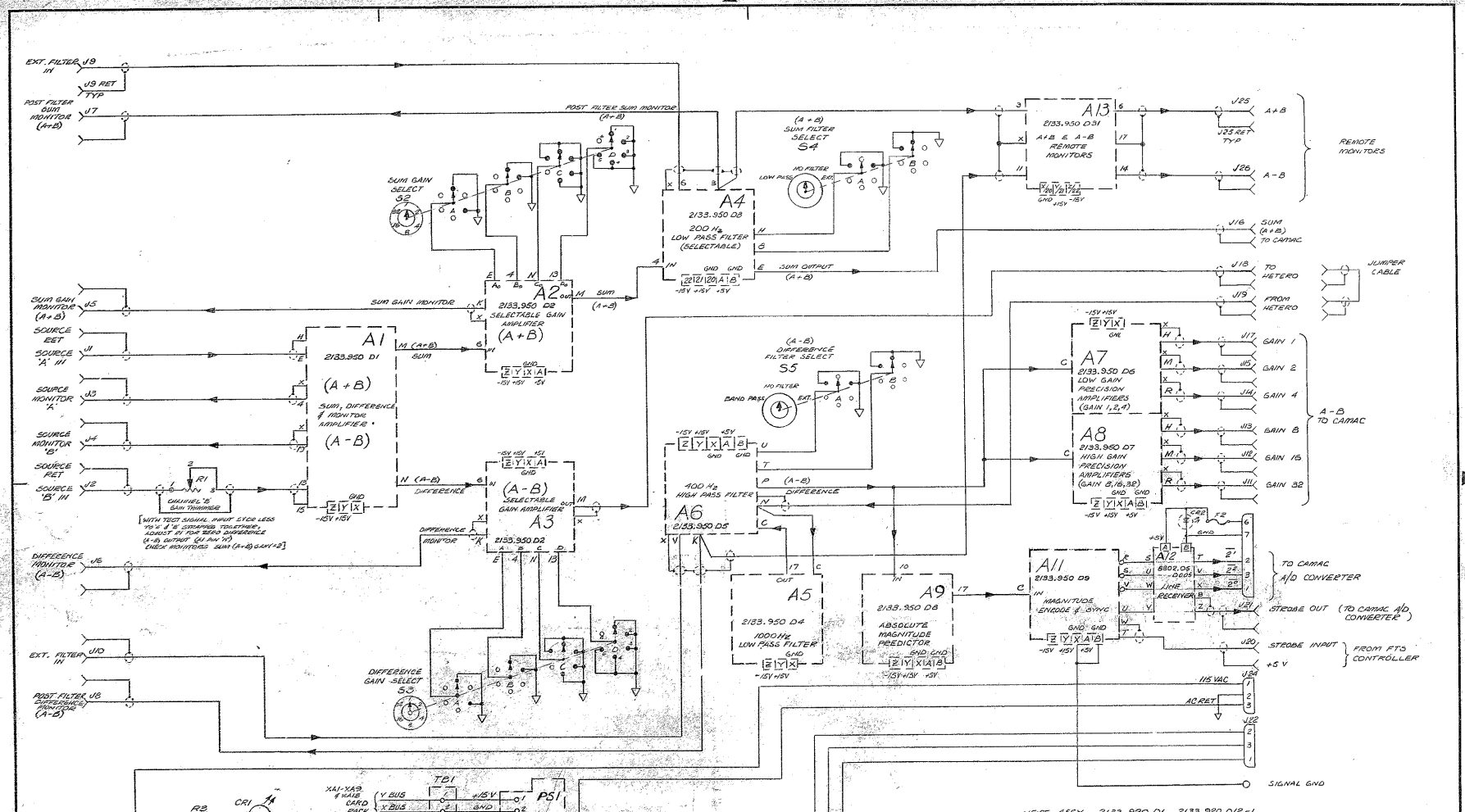
EXT. FILTER IN J9
J9 RET TYP
POST FILTER SUM MONITOR (A+B) J7
POST FILTER SUM MONITOR (A+B)
SUM GAIN SELECT S2
A2 2133.950 D2 SELECTABLE GAIN AMPLIFIER (A+B)
SUM GAIN MONITOR
SUM (A+B)
A4 2133.950 D8 200 Hz LOW PASS FILTER (SELECTABLE)
(A+B) SUM FILTER SELECT S4
NO FILTER
LOW PASS
EXT.
SUM OUTPUT (A+B)
A13 2133.950 D31 A+B & A-B REMOTE MONITORS
J25 A+B
J25 RET TYP
J26 A-B
REMOTE MONITORS
J16 SUM (A+B) TO CAMAC
J18 TO HETERO
J19 FROM HETERO
JUMPER CABLE
SUM GAIN MONITOR (A+B) J15
SOURCE RET
SOURCE 'A' IN J1
SOURCE MONITOR 'A' J3
SOURCE MONITOR 'B' J4
SOURCE RET
SOURCE 'B' IN J2
A1 2133.950 D1 (A+B) SUM, DIFFERENCE & MONITOR AMPLIFIER (A-B)
CHANNEL 'B' GAIN TRIMMER
WITH TEST SIGNAL INPUT 5TCD LESS 75 ± 1 % STRAPPED TOGETHER, ADJUST R1 FOR ZERO DIFFERENCE (A-B) OUTPUT. (J1 AND J2) CHECK MONITORS SUM (A+B) & (A-B)
M (A+B) SUM
N (A-B) DIFFERENCE
A3 2133.950 D2 (A-B) SELECTABLE GAIN AMPLIFIER
DIFFERENCE MONITOR
DIFFERENCE MONITOR (A-B) J6
(A-B) DIFFERENCE FILTER SELECT S5
BAND PASS
A6 2133.950 D5 400 Hz HIGH PASS FILTER
A5 2133.950 D4 1000 Hz LOW PASS FILTER
A9 2133.950 D8 ABSOLUTE MAGNITUDE PREDICTOR
A7 2133.950 D6 LOW GAIN PRECISION AMPLIFIERS (GAIN 1,2,4)
A8 2133.950 D7 HIGH GAIN PRECISION AMPLIFIERS (GAIN 8,16,32)
GAIN 1
GAIN 2
GAIN 4
GAIN 8
GAIN 16
GAIN 32
A-B TO CAMAC
A11 2133.950 D9 MAGNITUDE ENCODE & SYNC
A12 6802.05 .0025 LINE RECEIVER
TO CAMAC A/D CONVERTER
STROBE OUT (TO CAMAC A/D CONVERTER)
STROBE INPUT
+5 V
FROM FTS CONTROLLER
EXT. FILTER IN J10
POST FILTER J8 DIFFERENCE MONITOR (A-B)
DIFFERENCE GAIN SELECT S3
115 VAC
AC RET
J12
SIGNAL GND
NEXT ASSY 2133.920 D1, 2133.920 D12-1
R3
CR1
XA1-XA3 & XA8 CARD RACK
V BUS
X BUS
Z BUS
TB1
+15V
GND
-15V
PS1
XA1-9,11 CARD RACK
A BUS
B BUS
TB2
PS2
-24V
PS3
+24V
PS4
GND
TO GND ON SWITCHES S2,3,4,5
S1
F1
KITT PEAK NATIONAL OBSERVATORY
OPERATED BY THE ASSOCIATION OF UNIVERSITIES FOR RESEARCH IN ASTRONOMY, INC. UNDER CONTRACT WITH NATIONAL SCIENCE FOUNDATION
4M TELESCOPE COUDE
REF. FILE 1445
NAME SCHEMATIC - INTERCONNECTION 200 Hz LOW PASS 400Hz-1000Hz BAND PASS ANALOG PROCESSOR 1M - FTS
SCALE NONE
PRINT ISSUED
DRAWING NUMBER 2133.910 D1
REV. A
A UPDATE AS BUILT 9/14/76 RC
LET. REVISION ECR DATE BY
CHECKED BY DATE APPROVED BY DATE
RAC 3-9-76