NOTES: UNLESS OTHERWISE NOTED

1. REMOVE ALL BURRS AND SHARP EDGES .02 R MAX
2. MACHINED SURFACE ROUGHNESS 125
3. MAT'L. STAINLESS STEEL TYPE 203 E-Z CUT

REVISIONS					
LTR	DESCRIPTION	ECR	DATE	BY	APVD

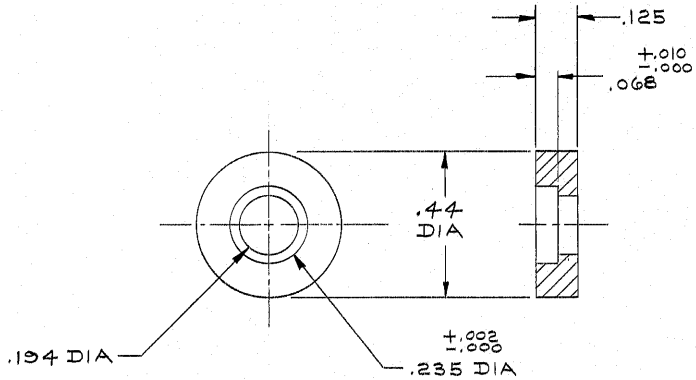

TOLERANCES UNLESS OTHERWISE NOTED

DECIMALS	FRACTIONS	ANGULAR
.XX ± .03	± —	± 0° 30'
.XXX ± .010		

KITT PEAK NATIONAL OBSERVATORY
OPERATED BY THE
ASSOCIATION OF UNIVERSITIES FOR RESEARCH IN ASTRONOMY, INC.
UNDER CONTRACT WITH
NATIONAL SCIENCE FOUNDATION

NEXT ASSEMBLY 2131.028-E1	NAME THRUST WASHER FILTER WHEEL				REF FILE 1311
SCALE 4/1	DESIGNED BY L.C.	DATE 4-16-73	APPROVED BY A.A.A.	DATE 4-20-73	DWG NO. 2131.028-B17 REV
PRINT ISSUED	DRAWN BY D.L.B.	DATE 2-16-76	APPROVED BY	DATE	
	CHECKED BY [illegible]	DATE 4-29-76	APPROVED BY	DATE	RELEASE DATE PD 30 1976