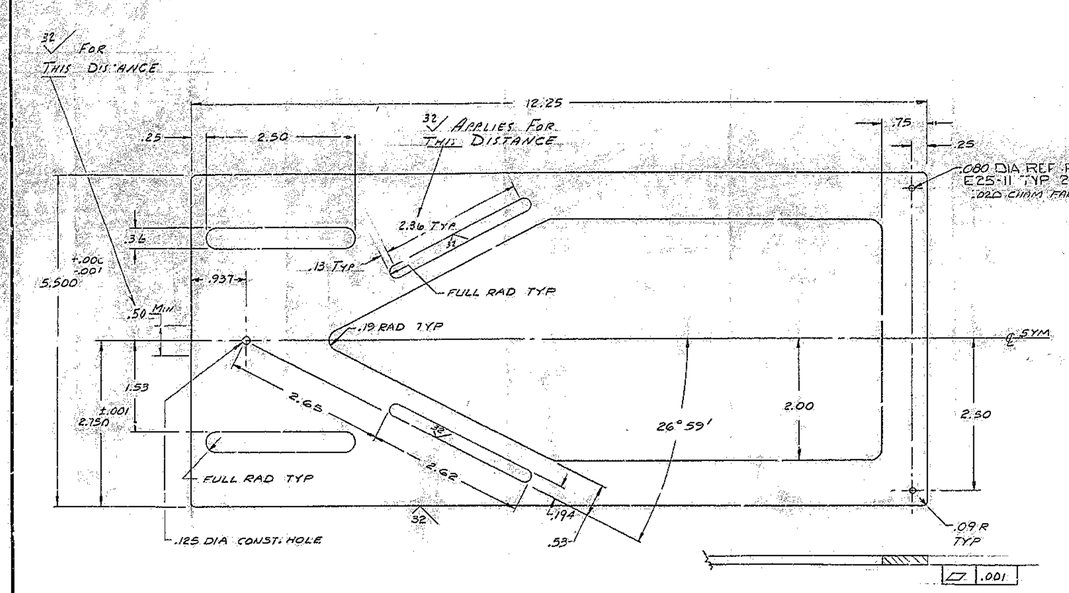

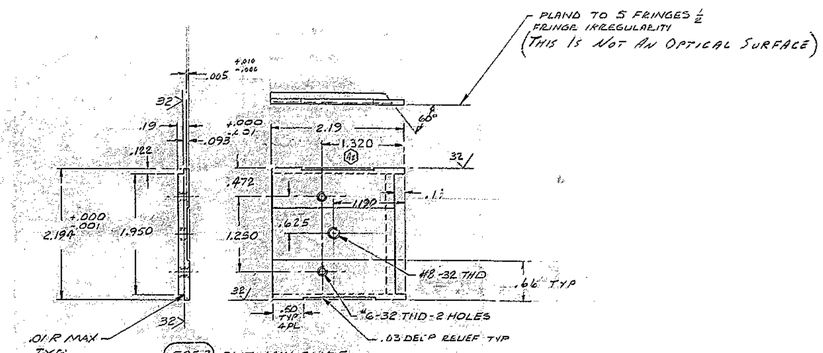

E25-3 SLIT JAW SLIDE
2 REQ'D 2024-T3 AL
HARD ANODIZE

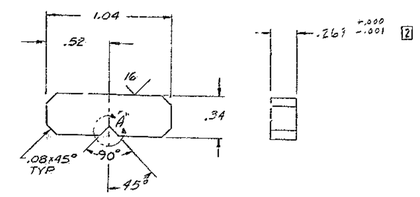

E25-4 SKYLIGHT SUPPRESSOR GUIDE
4 REQ'D KETOS OR EQUIV
HARDEN R/C 48-50 CHROME PLATE .0002 THK
SCALE: 2/1

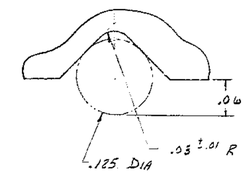

DETAIL "A"
SCALE: 10/1

E25-1 CAM PLATE
1 REQ'D GRADE "A" SPRING PHOSPHOR BRONZE ALLOY - .064 THK
OPTICAL BLACK CHEMICALLY

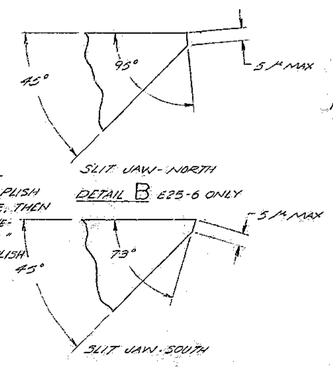

SUGGESTED PROCEDURE - GRIND & POLISH 45° TO ACCOMPLISH AS SHARP AN EDGE AS POSSIBLE, THEN USING A PIECE OF GLASS FINE-GROUND VERY FLAT, "DEBURR" THE SHARP EDGES TO ACCOMPLISH THE 73°, 95° & THE 5 μ MAX REQUIREMENTS.

DETAIL B E25-6 ONLY

DETAIL B E25-7 ONLY

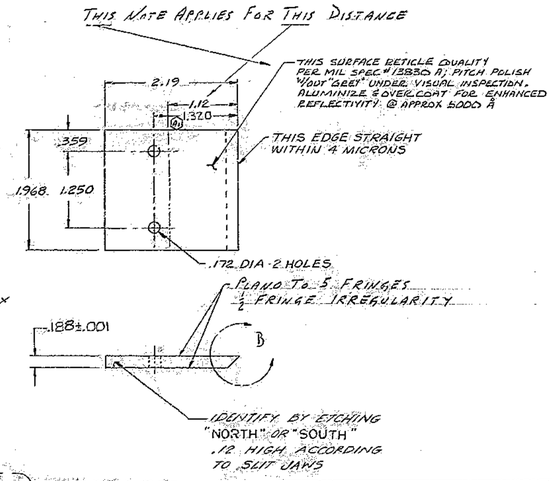

E25-6 SLIT JAW - NORTH
1 REQ'D - TANTUNG
UR/WESSON CO.

E25-7 SLIT JAW - SOUTH
1 REQ'D TANTUNG
UR/WESSON CO.

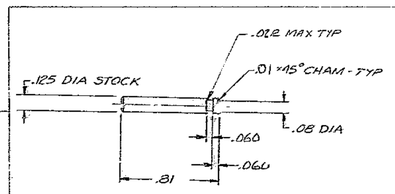

E25-8 PIN - SPRING ANCHOR
2 REQ'D BRASS ALLOY "271
OPTICAL BLACK CHEMICALLY
SCALE: 2/1

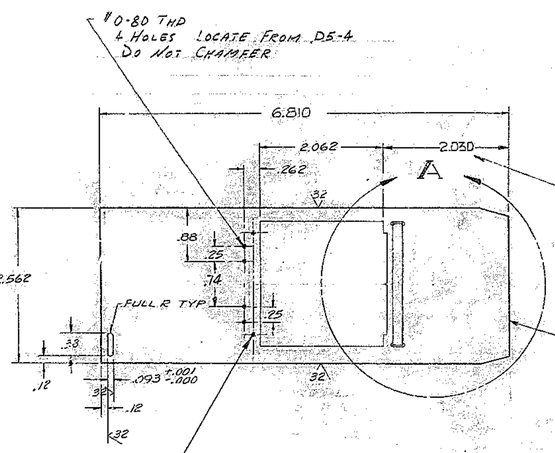

E25-3 COMPARISON MASK
1 REQ'D: STARRETT PRECISION GND DIE STK (469 DIE HARDENING TOOL STL) 3/4 x 3 x 18
BLACKEN ALL OVER WITH BLACK OXIDE FORMULA 44/40 OR EQUAL EXCEPT POLISHED AREA

D #0-80 THD
2 HOLES-LOCATED AT ASSY. WITH DECKER GRID ASSY. C4.4-1 IN POSITION

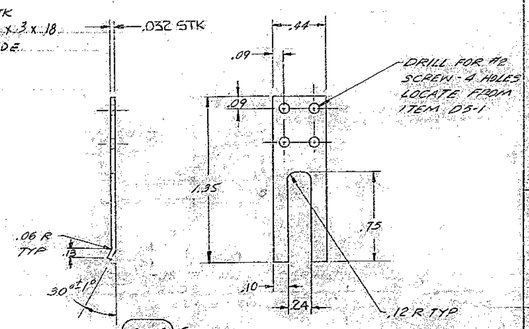

E25-9 SPRING
2 REQ'D, BERYLLIUM COPPER (1/4 HARD)
1. HEAT TO 600°F
2. SOAK FOR 2 HOURS
3. COOL IN STILL AIR TO ROOM TEMP
SCALE: 2/1

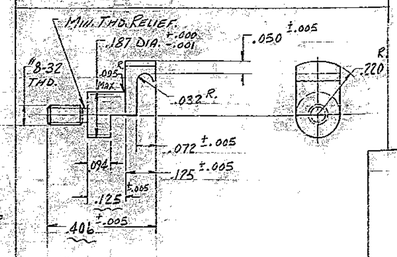

E

E25-10 PIN - SLIT JAW
2 REQ'D
SST TYPE 203 EZ CUT
SCALE: 4/1
NOTE: THIS ITEM MUST BE ORIENTED AS SHOWN ON 2131.004-E15 WITHIN ±10° WHEN FULLY TIGHTENED

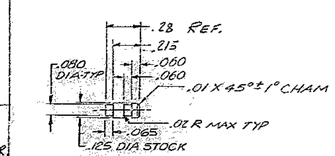

E25-11 PIN - SPRING ANCHOR
2 REQ'D BRASS ALLOY "271
OPTICAL BLACK CHEMICALLY
SCALE: 2/1

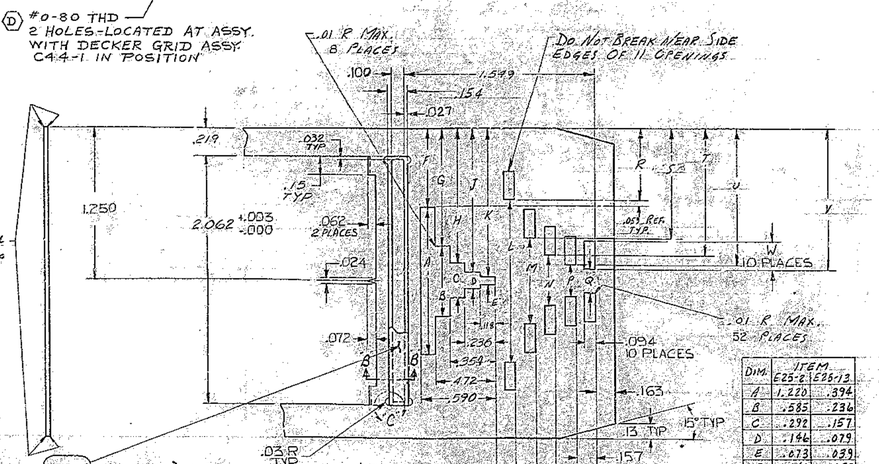

B2 NEUTRAL DENSITY
STEP WEDGE 1 REQ'D
ASSEMBLE TO E25-5 WITH RTV

DETAIL A
SCALE: 2/1

DIM.	ITEM E25-2	E25-13
A	1.220	.394
B	.585	.236
C	.292	.157
D	.146	.079
E	.073	.039
F	.640	1.053
G	.937	1.132
H	1.104	1.171
J	1.177	1.210
K	1.213	1.230
L	1.339	.512
M	.106	.354
N	.472	.275
P	.266	.197
Q	.192	.157
R	.581	.594
S	.898	1.072
T	1.060	1.112
U	1.117	.152
V	1.154	1.171
W	.260	.118

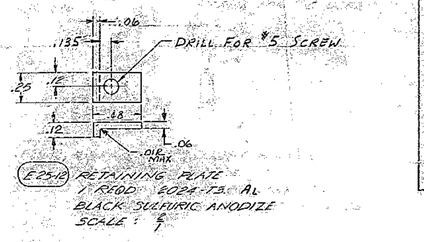

E25-12 RETAINING PLATE
1 REQ'D 6024-T3 AL
BLACK SULFURIC ANODIZE
SCALE: 2/1

DETAIL "C"

E25-13 COMPARISON MASK ASS'Y
1 REQ'D
SAME AS E25-2 EXCEPT AS NOTED

(SHOWN) E25-2 COMPARISON MASK ASSY
1 REQ'D

NOTES:
1. FOR ASSEMBLY SEE 2131.004-E18
2. DIM. APPLY AFTER COATING
3. BREAK SHARP EDGES .02 UNLESS OTHERWISE SPECIFIED

BILL OF MATERIAL

ITEM	QTY.	MATERIAL	DESCRIPTION	WEIGHT

LET.	REVISION	ECN	DATE	BY
E	E25-10 REDESIGNED	2015	4 APR 78	[illegible]
D	ADDED #0-80 THD, 2 HOLES	1814	3-9-77	[illegible]
C	REVISED AS BUILT	1454	8-11-75	[illegible]
B	ADDED E25-13	1209	13 JUL 72	RW
A1	1.320 DIM WAS 1.380	0961	28-73	ECP
A2	" " "		9 FEB 73	JP
A	MISC. MINOR CHANGES			

TOLERANCES UNLESS OTHERWISE NOTED:
DECIMAL DIMENSIONS .00 ±.010, .000 ±.003
FRACTIONAL DIMENSIONS UP TO 18" ± 1/64, 18" TO 36" ± 1/32, 36" & OVER ± 1/16
BREAK SHARP EDGES .01
ALL SURFACES TO HAVE 125 FINISH UNLESS OTHERWISE NOTED.
ANGLES ±0°-30'

KITT PEAK NATIONAL OBSERVATORY
OPERATED BY THE ASSOCIATION OF UNIVERSITIES FOR RESEARCH IN ASTRONOMY, INC. UNDER CONTRACT WITH NATIONAL SCIENCE FOUNDATION

150" TELESCOPE
NAME: CASSEGRAIN SPECTROGRAPH
SLIT ASSEMBLY DETAILS

REF FILE 1310
SCALE 1/12 NOTED
PRINT ISSUED

DESIGNED BY A. PERRY DATE 9-25-71 APPROVED BY [illegible] DATE 11-5-71
DRAWN BY C. MURRAY DATE 9/11/72 APPROVED BY DATE
CHECKED BY JP DATE 9-25-73 APPROVED BY [illegible] DATE 11-5-71

DRAWING NUMBER 2131.004-E25
REV. E

PAC 10-16-72