BILL OF MATERIAL

ITEM	QTY.	MATERIAL	DESCRIPTION	WEIGHT

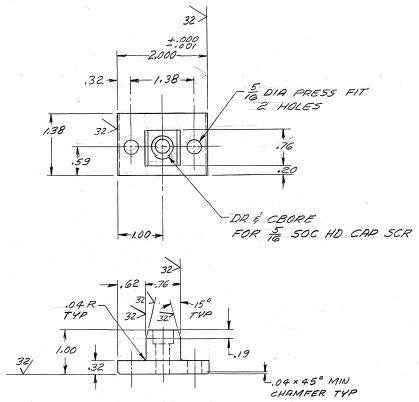

E19-1 LOCATOR
4 REQD TOOL STEEL
HARDEN TO R/C 58-62 THEN GRIND
NEXT ASSY E12-1

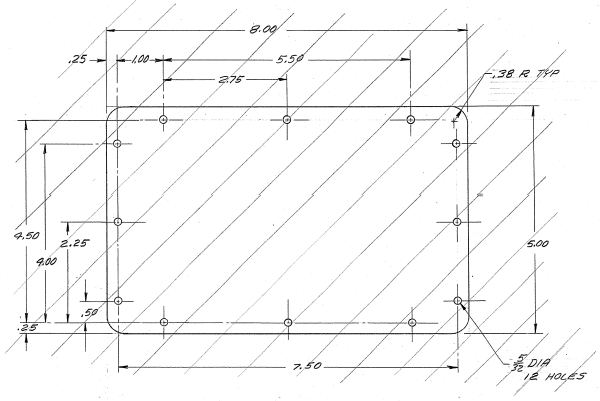

E19-2 COVER PLATE
4 REQD .063 THICK ALUMINUM
BLACK SULFURIC ANODIZE
NEXT ASSY E12-1

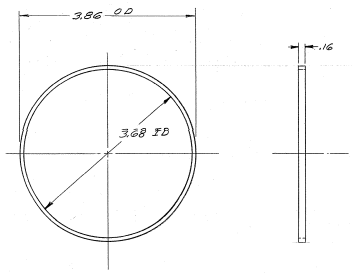

E19-3 SPACER
1 REQD ALUMINUM
BLACK SULFURIC ANODIZE
NEXT ASSY E8-1

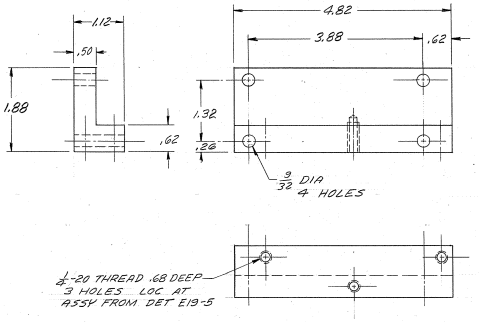

E19-4 ANGLE
1 REQD ALUMINUM
BLACK SULFURIC ANODIZE
NEXT ASSY E8-1

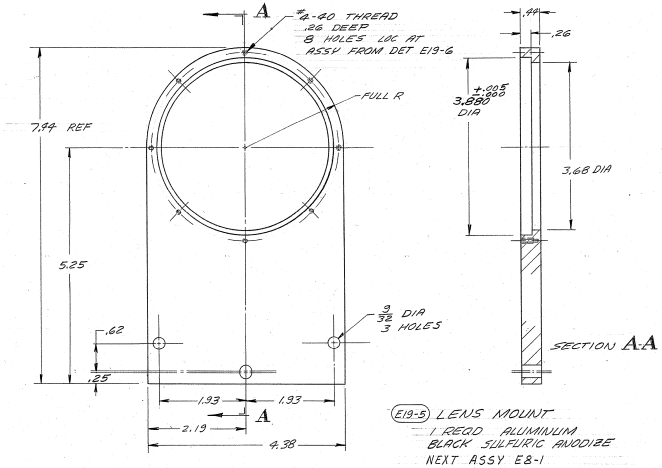

E19-5 LENS MOUNT
1 REQD ALUMINUM
BLACK SULFURIC ANODIZE
NEXT ASSY E8-1

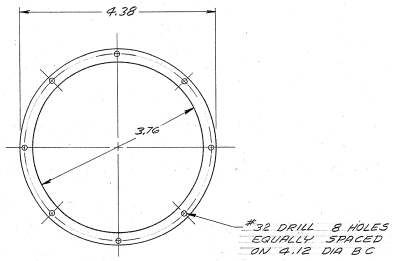

E19-6 BEZEL
1 REQD .063 THICK ALUMINUM
BLACK SULFURIC ANODIZE
NEXT ASSY E8-1

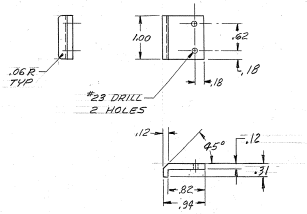

E19-7 CLIP
1 REQD ALUMINUM
BLACK SULFURIC ANODIZE
NEXT ASSY E8-1

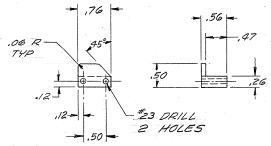

E19-8 CLIP
1 REQD ALUMINUM
BLACK SULFURIC ANODIZE
NEXT ASSY E8-1

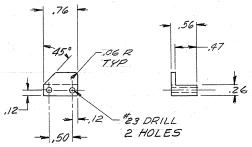

E19-9 CLIP
1 REQD ALUMINUM
BLACK SULFURIC ANODIZE
NEXT ASSY E8-1

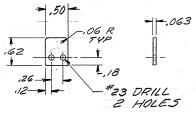

E19-10 END CLIP
2 REQD ALUMINUM
BLACK SULFURIC ANODIZE
NEXT ASSY E8-1

5-BREAK SHARP EDGES .02 MAX.
4-IDENTIFY BY ——— AT LOCATION 4 , "AURA INC. MADE IN U.S.A."
3-STAMP MATCH MARKS ON ALL MATING PARTS WHERE NECESSARY.
2-PROJECT DRAWINGS
1-FOR NEXT ASSY. SEE 2131.003-E12 & E8
NOTES:

LET.	REVISION	ECN	DATE	BY
A	DELETED ITEM E19-2	1753	11-18-76	

TOLERANCES UNLESS OTHERWISE NOTED.
DECIMAL DIMENSIONS .00 ± .010 .000 ± .005
FRACTIONAL DIMENSIONS UP TO 12" ± 1/64 OVER 12" ± 1/32 90° & OVER ± 1/16
ANGLES ± 0°-30'
ALL SURFACES TO HAVE 125√ FINISH UNLESS OTHERWISE NOTED.

KITT PEAK NATIONAL OBSERVATORY
OPERATED BY THE ASSOCIATION OF UNIVERSITIES FOR RESEARCH IN ASTRONOMY, INC. UNDER CONTRACT WITH NATIONAL SCIENCE FOUNDATION

150" TELESCOPE — REC. FILE 1301
NAME CASSEGRAIN GUIDER LENS SYSTEM & COVER SUB ASSY DETAILS — SCALE 1/1 — PRINT ISSUED

DESIGNED BY	DATE	ACCEPTED BY	DATE	DRAWING NUMBER	REV.
C. Ott	8-1-71	Daniel	11-16-73	2131.003-E19	A
DRAWN BY	DATE	APPROVED BY	DATE		
Fred Hill	7-26-71				
CHECKED BY	DATE	APPROVED BY	DATE		

EAC 11-16-73

AAA DESIGN

8/71 DIETERICH-POST CLEARPRINT 1020