**NOTES:** UNLESS OTHERWISE NOTED
1. REMOVE ALL BURRS AND SHARP EDGES .020
2. MACHINED SURFACE ROUGHNESS 125
3. MATL: AL ALLOY 2024-T351
4. FINISH: BLACK SULFURIC ANODIZE

| REVISIONS | | | | | | |
|---|---|---|---|---|---|---|
| ZONE | LTR | DESCRIPTION | ECR | DATE | BY | APVD |

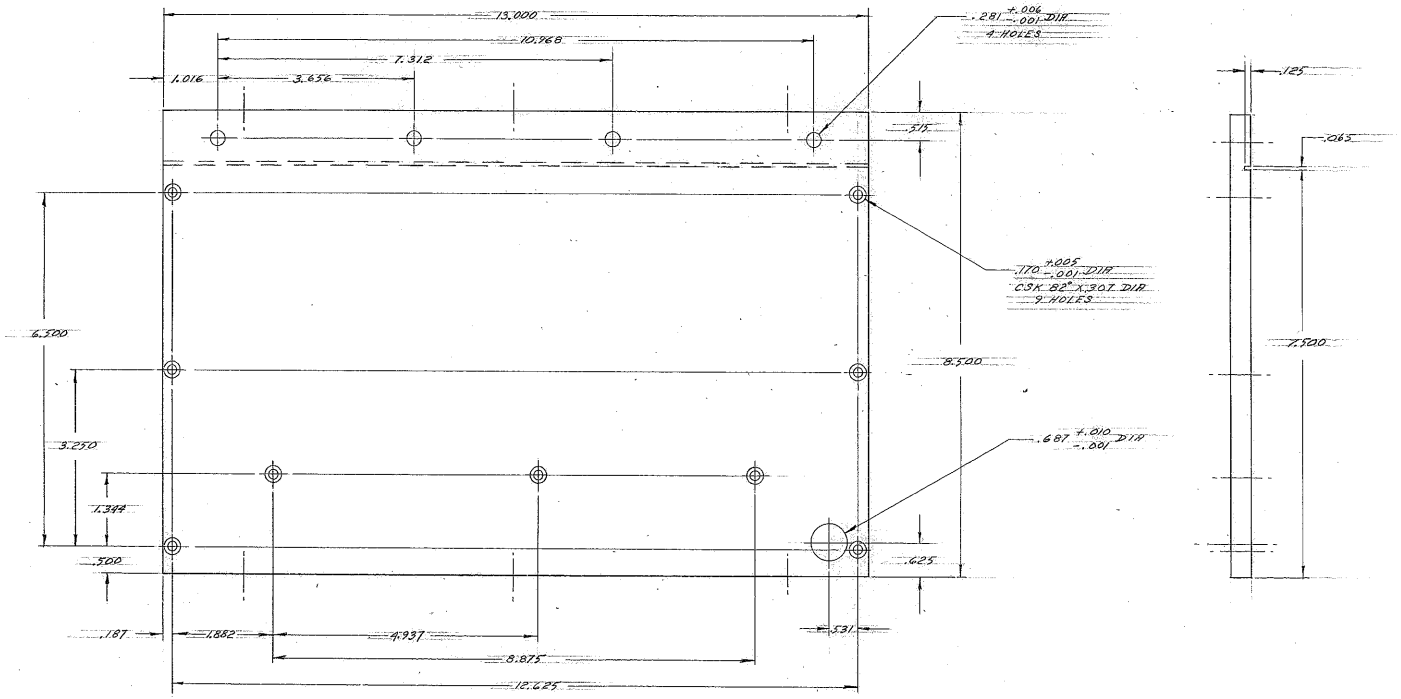


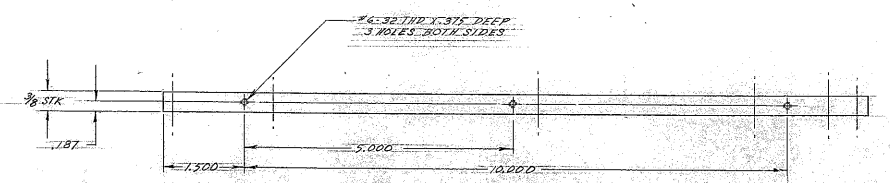


-1 SHOWN
-2 OPPOSITE

| QTY REQD | PART OR IDENTIFYING NO. | DESCRIPTION | MATERIAL/SPECIFICATION | ITEM NO. |
|---|---|---|---|---|
| | | PARTS LIST | | |

TOLERANCES UNLESS OTHERWISE NOTED
DECIMALS: .XX ± .03, .XXX ± .010
FRACTIONS: ± —
ANGULAR: ± 0° 30'

NEXT ASSEMBLY
(-1) 2131.003-E46-1
(-2) 2131.003-E46-2

**KITT PEAK NATIONAL OBSERVATORY**
OPERATED BY THE ASSOCIATION OF UNIVERSITIES FOR RESEARCH IN ASTRONOMY, INC. UNDER CONTRACT WITH NATIONAL SCIENCE FOUNDATION

NAME: BOTTOM MTG PLATE
REF. FILE 1301

SCALE //
PRINT ISSUED

| DESIGNED BY | DATE | APPROVED BY | DATE |
|---|---|---|---|
| C. [illegible] | 12-20-74 | [illegible] | 12-24-74 |
| DRAWN BY | DATE | APPROVED BY | DATE |
| [illegible] | 12-24 | | |
| CHECKED BY | DATE | APPROVED BY | DATE |
| [illegible] | 12-19-74 | | |

DWG NO. 2131.003-D9 REV
RELEASE DATE 1-10-75

FAC 1-8-75

4/71 DIECHOPOST CLEARPRINT 1020