NOTES: UNLESS OTHERWISE SPECIFIED
1. REMOVE ALL BURRS AND SHARP EDGES .015
2. MACHINED SURFACE ROUGHNESS 125 ✓
3. MAT'L:
4. FINISH:

REVISIONS						
ZONE	LTR	DESCRIPTION	ECR	DATE	BY	APRV

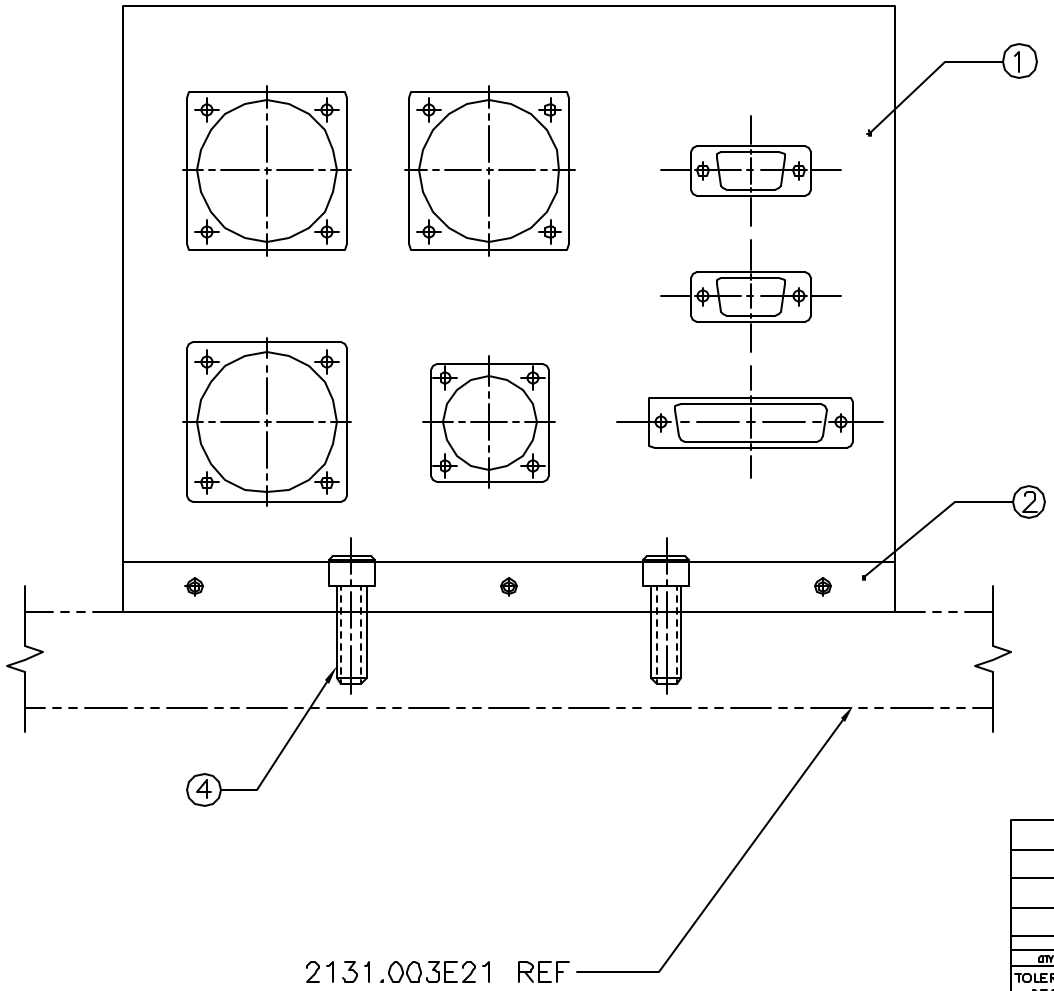

QTY REQD		PART OR IDENTIFYING NO	DESCRIPTION MATERIAL/SPECIFICATION	ZONE	ITEM NO
	2		5/16-18 X 1-1/2 LG SOC HD CAP SCR SST		4
	3		8-32 X 7/8 LG SOC HD CAP SCR SST		3
	1	2131.003A34	ELECTRICAL JUNCTION-MOUNTING BRACKET		2
	1	2131.003C29	ELECTRICAL JUNCTION-PLATE		1

TOLERANCES UNLESS OTHERWISE NOTED
DECIMALS .XX ± .03 .XXX ± .010
FRACTIONS ± –
ANGULAR ± 0°30'

NATIONAL OPTICAL ASTRONOMY OBSERVATORIES
OPERATED BY THE
ASSOCIATION OF UNIVERSITIES FOR RESEARCH IN ASTRONOMY
UNDER COOPERATIVE AGREEMENT WITH
NATIONAL SCIENCE FOUNDATION

NEXT ASSEMBLY: 2131.003E1

NAME: ELECTRICAL JUNCTION ASSY

REF FILE: 1301

USED ON:

SCALE: 1/2 &NOTED	DESIGNED BY W.GOBLE	DATE 06/28/02	APPROVED BY	DATE	DWG NO 2131.003C28	REV
DRAWING PRODUCED USING AUTOCAD v.14	DRAWN BY W.GOBLE	DATE 06/28/02	APPROVED BY	DATE		
PRINT ISSUED	CHECKED BY	DATE	APPROVED BY	DATE	RELEASED	SHEET 1 OF 1