NOTES: UNLESS OTHERWISE SPECIFIED

1. REMOVE ALL BURRS AND SHARP EDGES .015
2. MACHINED SURFACE ROUGHNESS 125 ✓
3. MAT'L: ALUMINUM ALLOY 6061-T6
4. FINISH: BLACK ANODIZE

REVISIONS					
LTR	DESCRIPTION	ECR	DATE	BY	APRV

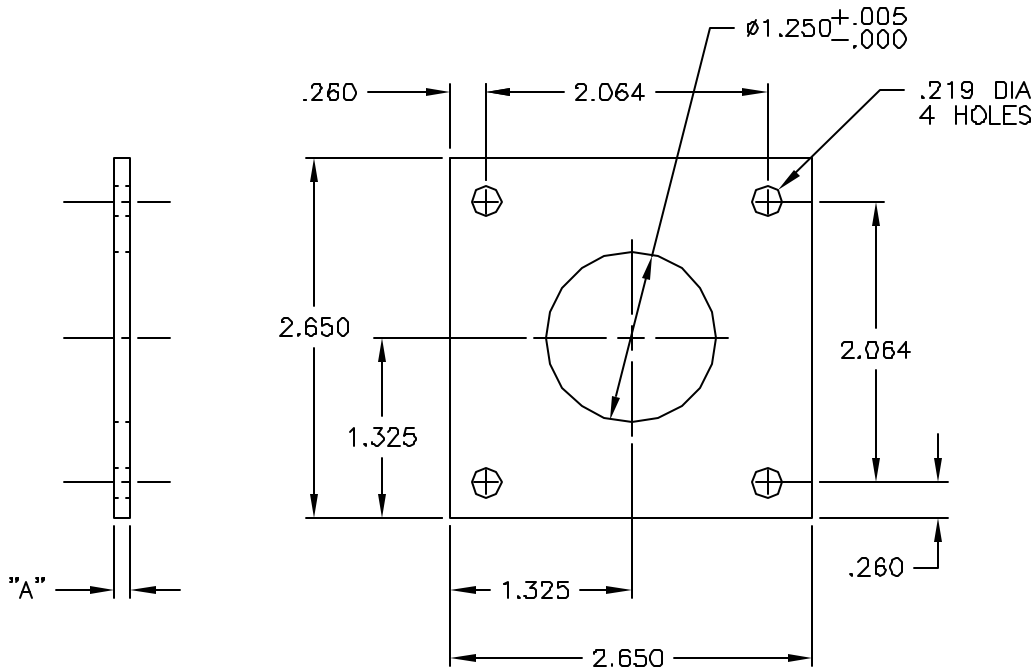

PART NO	"A" DIM
2131.003B20-1	.125
2131.003B20-2	.200

TOLERANCES UNLESS OTHERWISE NOTED
DECIMALS FRACTIONS ANGULAR
.XX ± .03 ± – ± 0°30'
.XXX ± .010

NATIONAL OPTICAL ASTRONOMY OBSERVATORIES
OPERATED BY THE
ASSOCIATION OF UNIVERSITIES FOR RESEARCH IN ASTRONOMY
UNDER COOPERATIVE AGREEMENT WITH
NATIONAL SCIENCE FOUNDATION

NEXT ASSEMBLY: 2131.003E9

NAME: WAVEFRONT CAMERA-ENCODER SPACER

REF FILE: 1301

USED ON:

SCALE	DESIGNED BY	DATE	APPROVED BY	DATE	DWG NO	REV
FULL					2131.003B20	
DRAWING PRODUCED USING: AUTOCAD v.14	DRAWN BY: J.HOEY	DATE: 06/06/01	APPROVED BY	DATE		
ISSUED	CHECKED BY	DATE	APPROVED BY	DATE	RELEASED	SHEET OF