BILL OF MATERIAL

ITEM	QTY.	MATERIAL	DESCRIPTION	WEIGHT

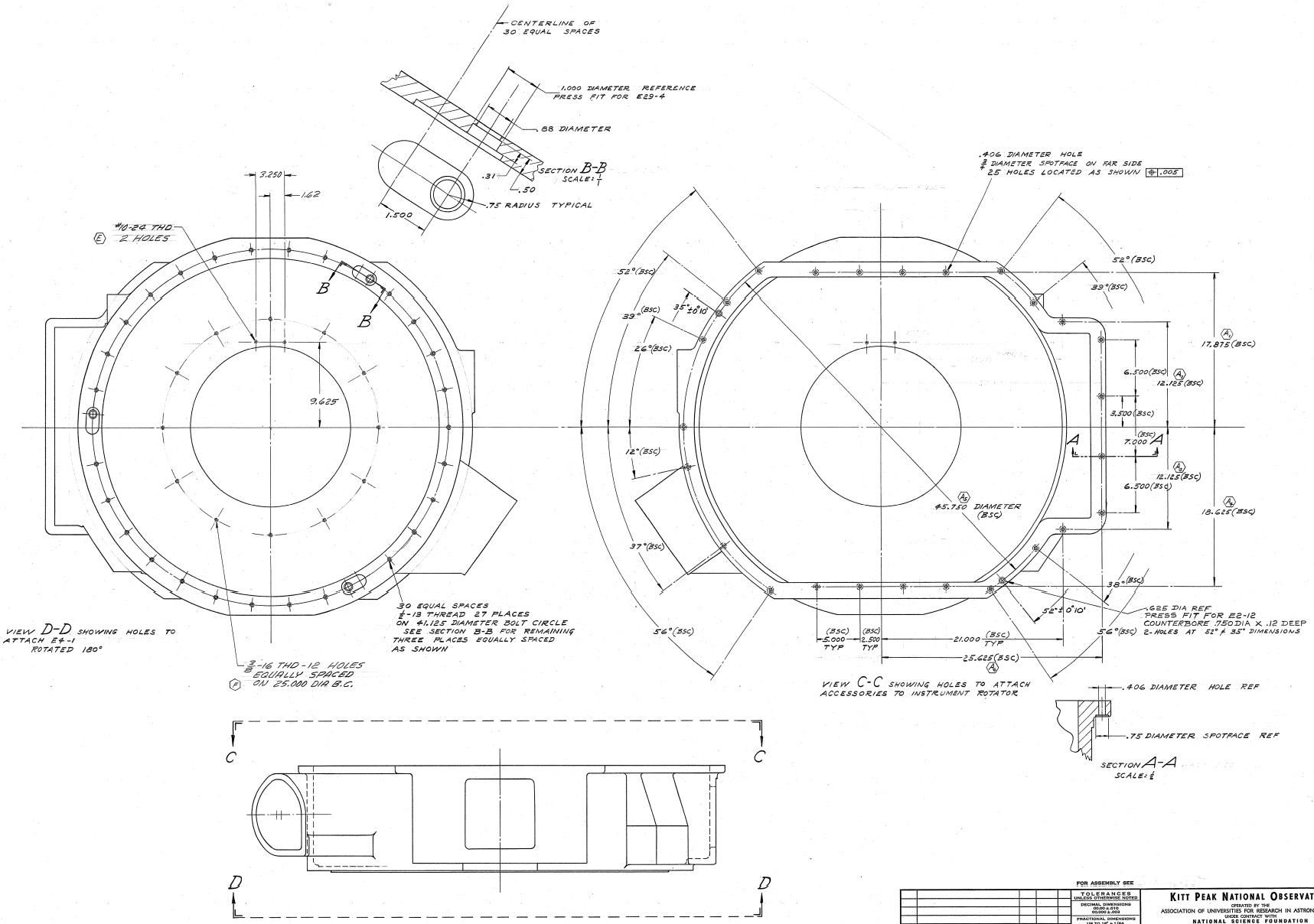

FOR ASSEMBLY SEE

TOLERANCES UNLESS OTHERWISE NOTED
DECIMAL DIMENSIONS 00.000 ±.005 00.000 ±.003
FRACTIONAL DIMENSIONS UP TO 18" ± 1/64 18" TO 30" ± 1/32 30" & OVER ± 1/16
BREAK SHARP EDGES .02
ALL SURFACES 125 TO HAVE FINISH UNLESS OTHERWISE NOTED.

LTR.	REVISION	ECR	DATE	BY
	FOR REVISIONS SEE SHT #1			

KITT PEAK NATIONAL OBSERVATORY
OPERATED BY THE ASSOCIATION OF UNIVERSITIES FOR RESEARCH IN ASTRONOMY, INC. UNDER CONTRACT WITH NATIONAL SCIENCE FOUNDATION

150" TELESCOPE — REF. DWG. 1290

NAME: CASSEGRAIN INST. ROTATOR FRAME — SCALE 1/1 (NOTED) — PRINT ISSUED

PREPARED BY	DATE	APPROVED BY	DATE	DRAWING NUMBER	REV.
DRAWN BY	DATE	APPROVED BY	DATE	2131.002-E28	E
CHECKED BY	DATE	APPROVED BY	DATE		

SH 3 OF 3

9/59 DIETERICH-POST CLEARPRINT 3000