REVISIONS						
ZONE	LTR	REVISIONS	ECR	DATE	BY	APRV

NOTES:

1. REMOVE ALL BURRS AND SHARP EDGES; 0.015 R MAX.
2. MACHINED SURFACE ROUGHNESS 32/
3. MAT'L: FABRICATE FROM OFHC COPPER.
4. FINISH: ELECTRO-POLISH

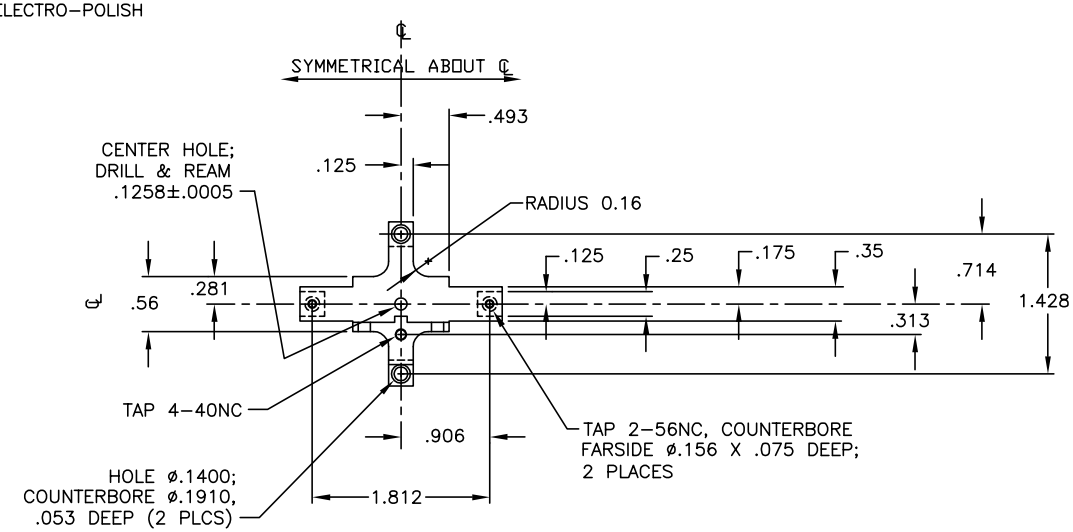

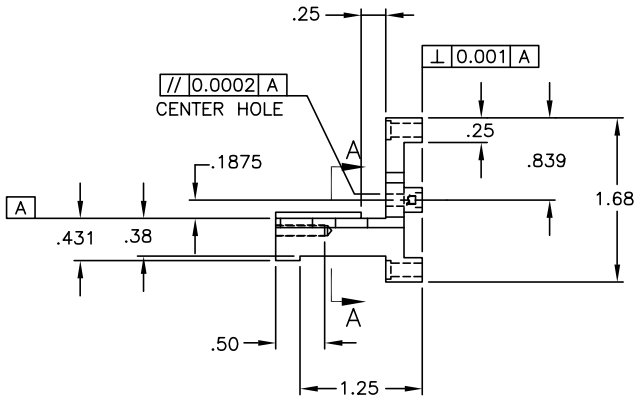

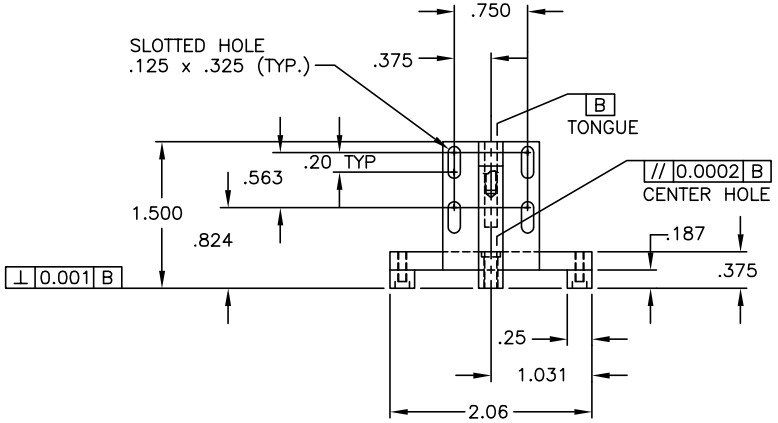

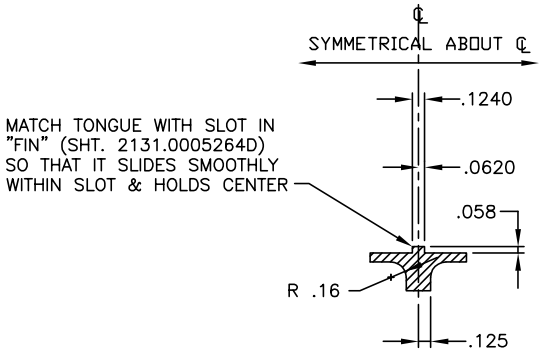

SECTION A-A

QTY REQD	PART OR IDENTIFYING NO	DESCRIPTION	MATERIAL/SPECIFICATION	ZONE	ITEM NO

TOLERANCES UNLESS OTHERWISE NOTED
DECIMALS
.XX ± .02
.XXX ± .006 UN. NTD.
.XXXX ± .0010 UN. NTD.
FRACTIONS
ANGULAR
.X ± 1°0'
.XX ± 0°04'

NATIONAL OPTICAL ASTRONOMY OBSERVATORIES
OPERATED BY THE
ASSOCIATION OF UNIVERSITIES FOR RESEARCH IN ASTRONOMY
UNDER CONTRACT WITH
NATIONAL SCIENCE FOUNDATION

NEXT ASSEMBLY: 2131.0008404D

NAME: SEAT; DETECTOR MOUNT

REF FILE: 1307

USED ON: CRYOCAM

SCALE	DRAWN BY	DATE	APPROVED BY	DATE	DWG NO	REV
FULL	R. BLAKLEY	2/21/01			2131.0008403C	
ISSUED	CHECKED BY	DATE	APPROVED BY	DATE	RELEASED	SHEET 1 OF 1
	RDB	3/28/01				