BILL OF MATERIAL				
ITEM	QTY.	MATERIAL	DESCRIPTION	WEIGHT

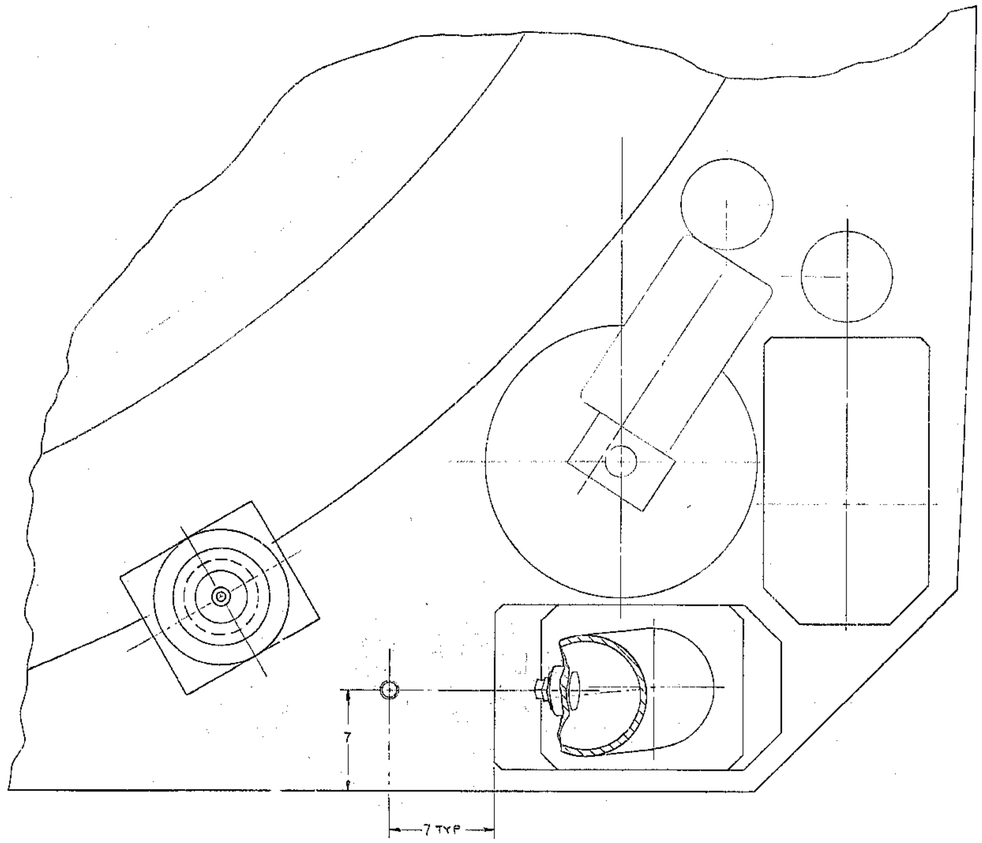

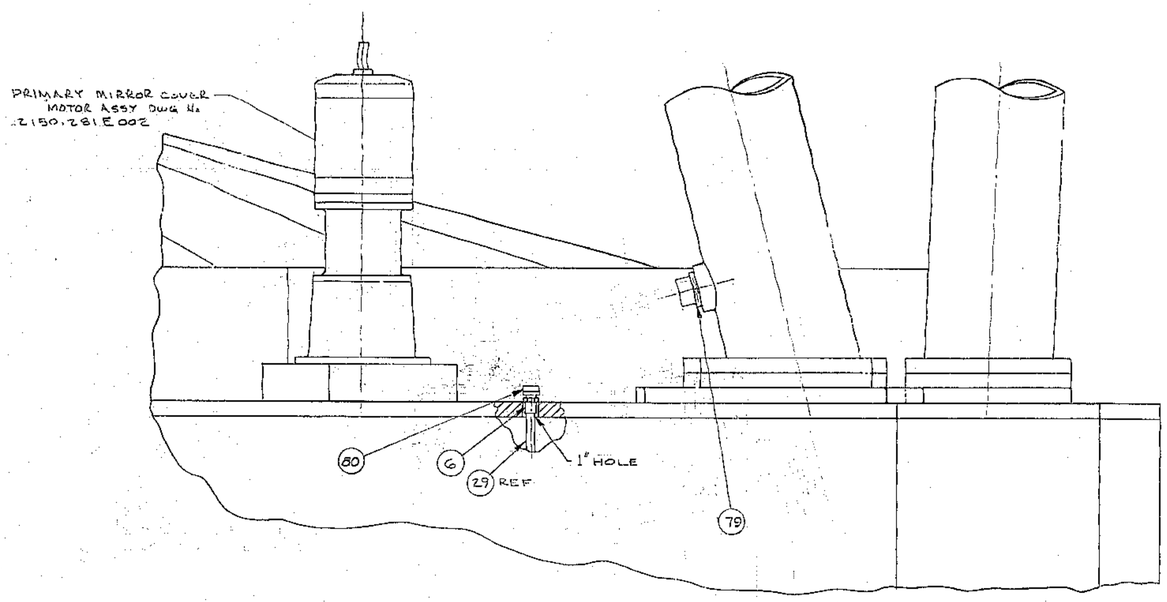

DETAIL B
SCALE 1/4
PRIMARY MIRROR COVER MOTOR

TYP 2 PLACES

FOR ASSEMBLY SEE

LET.	REVISION	ECR	DATE	BY
A	DELETED AIR MOTOR & AIR SUPPLY LINES AND PROV. FOR ELECTRIC SUBSTITUTE	2040	3-16-78	[illegible]

TOLERANCES UNLESS OTHERWISE NOTED
DECIMAL DIMENSIONS
00.00 ±.010
00.000 ±.003
FRACTIONAL DIMENSIONS
UP TO 18" ± 1/64
8" TO 60" ± 1/32
30" & OVER ± 1/16
BREAK SHARP EDGES
ALL SURFACES TO HAVE 125 √ FINISH UNLESS OTHERWISE NOTED.

KITT PEAK NATIONAL OBSERVATORY
OPERATED BY THE
ASSOCIATION OF UNIVERSITIES FOR RESEARCH IN ASTRONOMY, INC.
UNDER CONTRACT WITH
NATIONAL SCIENCE FOUNDATION

150 INCH STELLAR TELESCOPE MOUNTING

NAME: LAYOUT OF AIR & VACUUM SUPPLY SYSTEM

SCALE NOTED
PRINT ISSUED

DESIGNED BY	DATE	APPROVED BY	DATE
U.B.H.	11-17-77		
DRAWN BY U.B.H.	DATE 11-17-77	APPROVED BY	DATE
CHECKED BY	DATE	APPROVED BY	DATE

DRAWING NUMBER 2120-E161 REV. A

SHT. 4 OF 4

File No. 1174