BILL OF MATERIAL				
ITEM	QTY.	MATERIAL	DESCRIPTION	WEIGHT

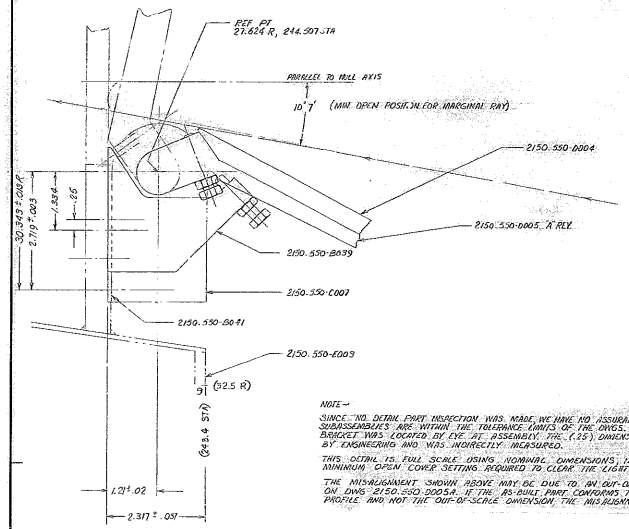

VIEW A

NOTE –
SINCE NO DETAIL PART INSPECTION WAS MADE, WE HAVE NO ASSURANCE THAT THE COVER SUBASSEMBLIES ARE WITHIN THE TOLERANCE LIMITS OF THE DWGS. FURTHER, THE STOP BRACKET WAS LOCATED BY EYE AT ASSEMBLY. THE (.25) DIMENSION WAS SUPPLIED BY ENGINEERING AND WAS INDIRECTLY MEASURED.

THIS DETAIL IS FULL SCALE USING NOMINAL DIMENSIONS. IT ESTABLISHES THE MINIMUM OPEN COVER SETTING REQUIRED TO CLEAR THE LIGHT PATH.

THE MIS-ALIGNMENT SHOWN ABOVE MAY BE DUE TO AN OUT-OF-SCALE DIMENSION ON DWG 2150.550-D005A. IF THE AS-BUILT PART CONFORMS TO THE DWG. PROFILE AND NOT THE OUT-OF-SCALE DIMENSION, THE MISALIGNMENT DISAPPEARS.

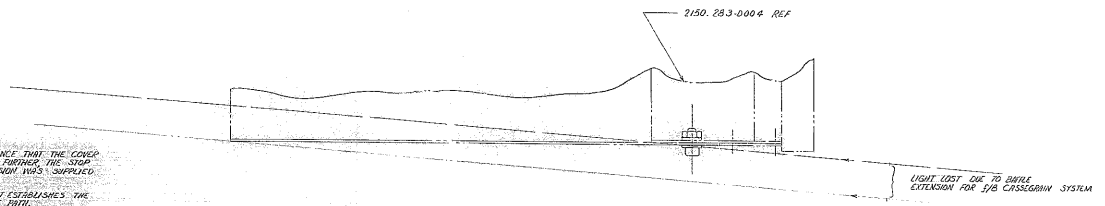

VIEW B
INSTALLATION - INNER BEAM (BAFFLE ADDED)
FULL SCALE

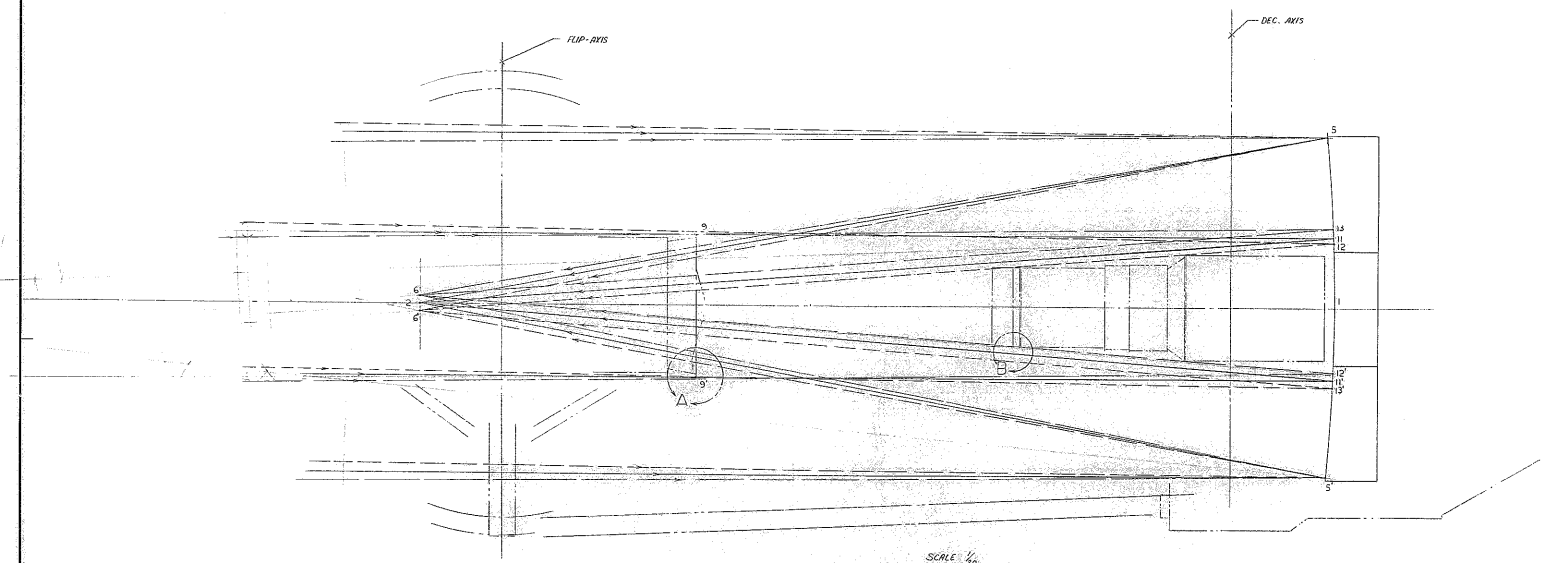

SCALE 1/20
(FOR REFERENCE SEE AURA ENG. TECH. REPORTS 25 & 42)

TOLERANCES UNLESS OTHERWISE NOTED	
DECIMAL DIMENSIONS	±0.005 ±.010 ±.005
FRACTIONAL DIMENSIONS	UP TO 18" ± 1/64 18" & OVER ± 1/32 36" & OVER ± 1/16
BREAK SHARP EDGES	
ALL SURFACES TO HAVE 125 FINISH UNLESS OTHERWISE NOTED.	

FOR ASSEMBLY SEE

REVISIONS			
NO.	REVISION	DATE	BY

PREPARED BY	DATE	APPROVED BY	DATE
CHECKED BY	DATE	APPROVED BY	DATE
CHECKED BY	DATE	APPROVED BY	DATE

REF. FILE 1218

KITT PEAK NATIONAL OBSERVATORY
OPERATED BY THE
ASSOCIATION OF UNIVERSITIES FOR RESEARCH IN ASTRONOMY, INC.
UNDER CONTRACT WITH
NATIONAL SCIENCE FOUNDATION

NAME: 150 IN STELLOR TELESCOPE
LAYOUT - 5°2.4 FOCUS RAY TRACE, BAFFLES AND SECONDARY COVER PETAL LIMITS

SCALE NOTED
PRINT ISSUED

DRAWING NUMBER 2106 E7
REV.

ABC 2-26-73

QUANT. | PRINT RECORD | DATE