BILL OF MATERIA

ITEM	QTY.	MATERIAL	DESC

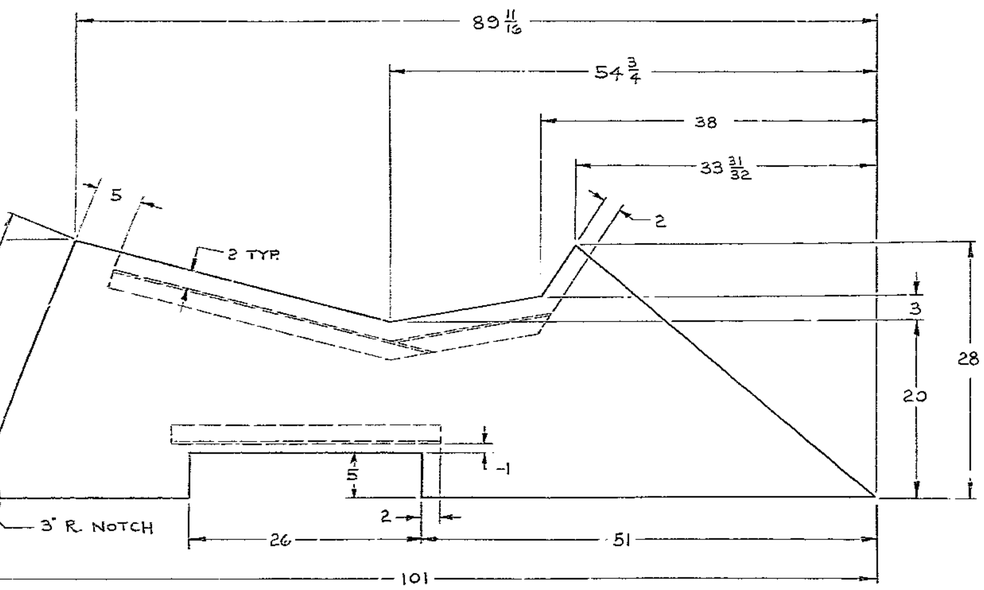

E13-1 WEST CORNER PLATE
MAT'L. 1/4 ASTM A-7 STEEL
1-REQ'D.

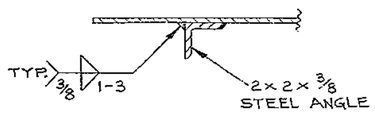

SECTION "A-A" TYP.
SCALE: 1/4" = 1"

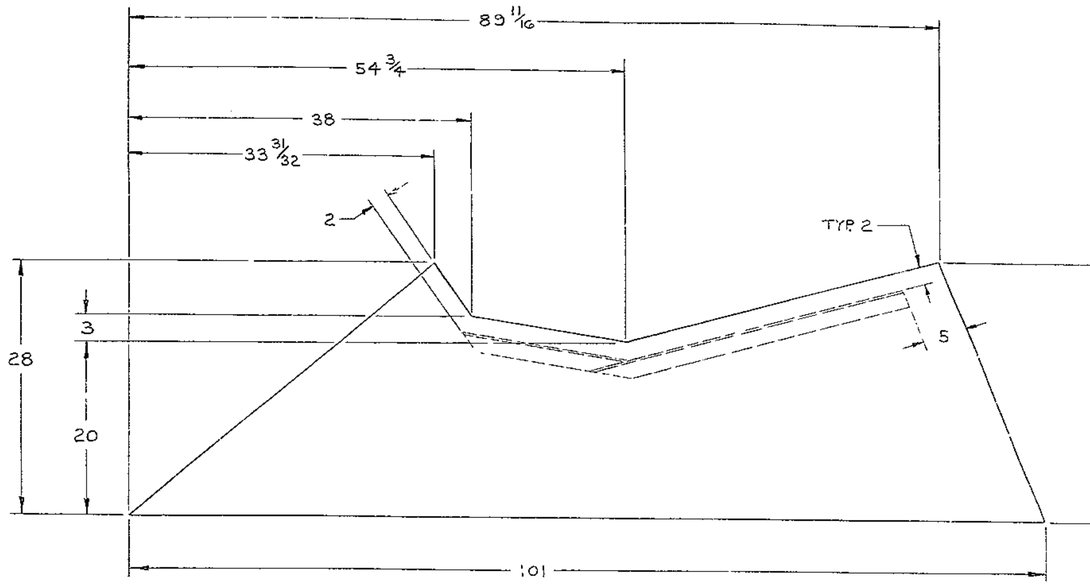

E13-4 EAST CORNER PLATE
MAT'L. 1/4 ASTM A-7 STEEL
1-REQ'D.

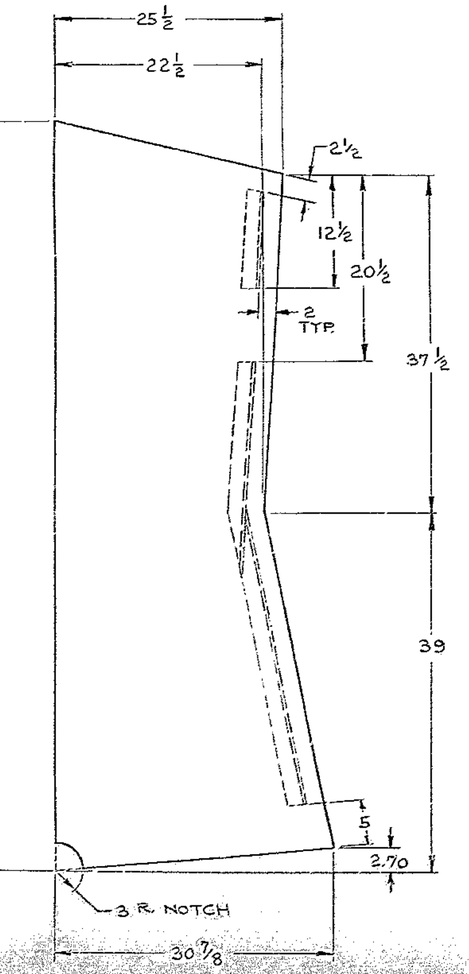

E13-2 WEST SIDE PLATE
MAT'L. 1/4 ASTM A-7 STEEL
1-REQ'D.

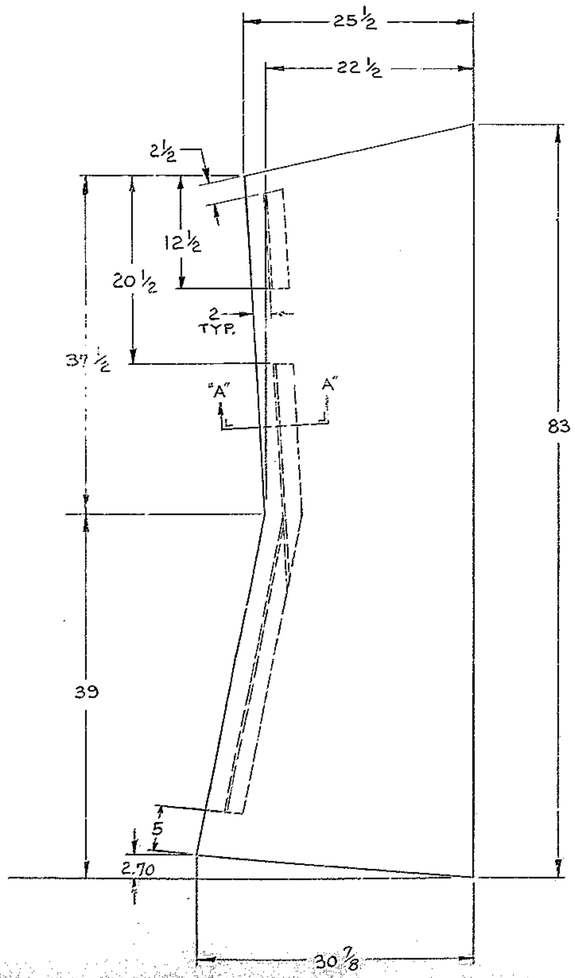

E13-3 EAST SIDE PLATE
MAT'L. 1/4 ASTM A-7 STEEL
1-REQ'D.

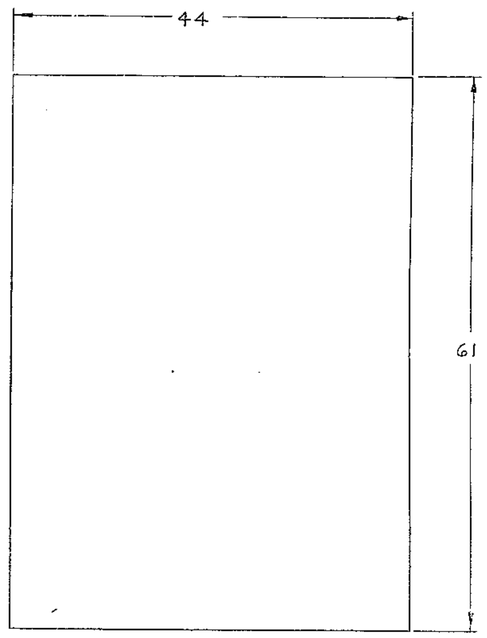

E13-5 CENTER PLATE
MAT'L. 1/4 ASTM A7 STEEL
1-REQ'D.

FABRICATION INSTRUCTION

1. FABRICATE WOODEN TEMPLATES FOR E PLATES USING THE DIMENSIONS SH DRAWING. DO NOT INSTALL THE STEEL
2. FIT THE WOODEN FLOOR TEMPLATES T AND TELESCOPE IN ACCORDANCE WITH T CALLED OUT ON DRAWING 2102-E10. TRIM THE TEMPLATES AS REQUIRED, T PROPER FITS AND CLEARANCES.
3. FABRICATE THE 1/4 INCH STEEL FLOOR FITTED TEMPLATES, AND INSTALL T ANGLES. LOCATE THESE ANGLES FR STEEL PLATES USING THE WORKING NOTED ON THIS DRAWING.
4. MAKE THE REQUIRED AS-BUILT CHANG TO SHOW THE FABRICATED FLOOR PLAT

FOR ASSEMBLY SEE 2102-E10

LET.	REVISION	ECR	DATE	BY

TOLERANCES UNLESS OTHERWISE NOTED
DECIMAL DIMENSIONS 00.00 ± .010, 00.000 ± .003
FRACTIONAL DIMENSIONS UP TO 18" ± 1/64, 18" TO 30" ± 1/32, 30" & OVER ± 1/16
BREAK SHARP EDGES .03
ALL SURFACES 125 TO HAVE ✓ FINISH UNLESS OTHERWISE NOTED.

KITT PEAK NATION
OPERATED
ASSOCIATION OF UNIVERSITIES FOR
UNDER CONTR
NATIONAL SCIENC

150 INCH STELLAR TEL

NAME
BUILDING STRUC
R.A. DRIVE ROOM FLOO

DESIGNED BY	DATE	APPROVED BY	DATE
R.A.A.	1-21-71	[illegible]	3-17-71
DRAWN BY D.L.S.	1-25-71	JRL	3-17-71
CHECKED BY E. CHAED.	3-17-71	APPROVED BY	DATE