BILL OF MATERIAL

ITEM	QTY.	MATERIAL	DESCRIPTION

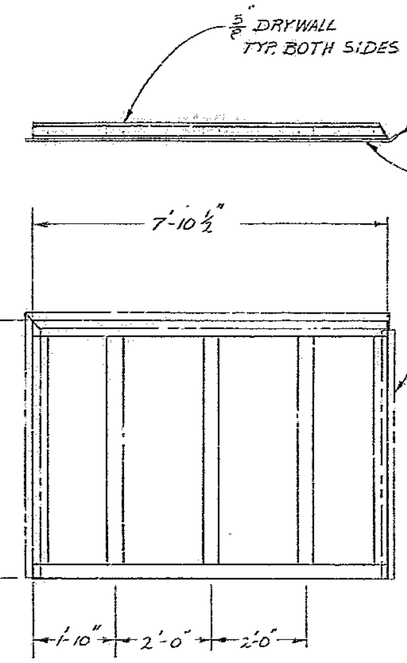

PANEL "A"
SCALE: 1/2" = 1'-0"

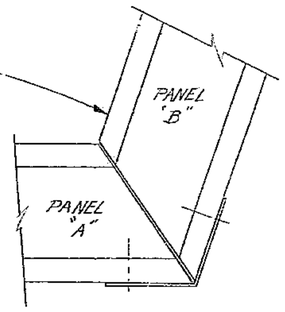

SECTION A-A
JUNCTION OF PANELS "A" & "B"

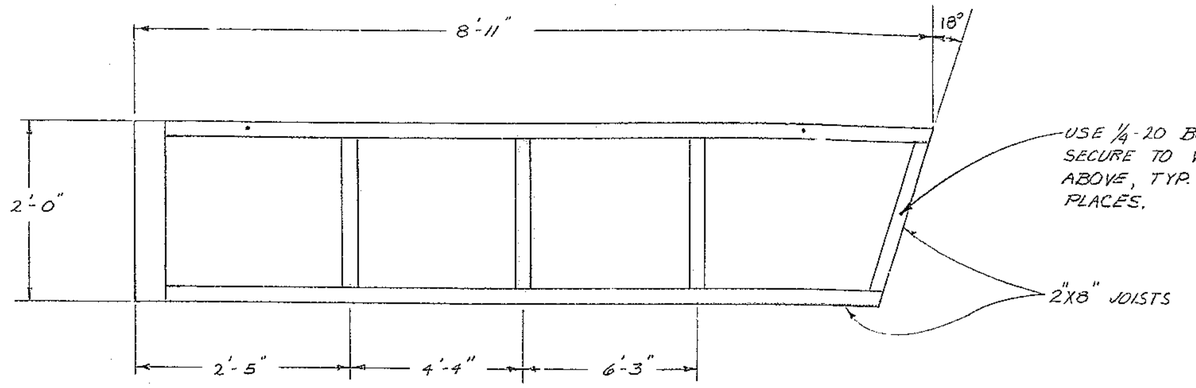

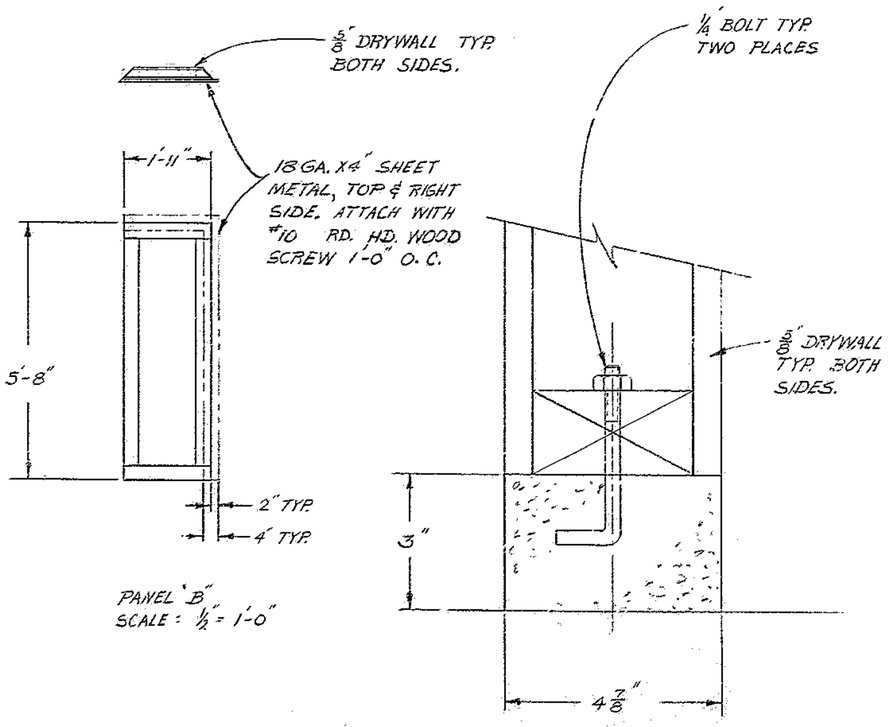

PANEL "B"
SCALE: 1/2" = 1'-0"

SECTION B-B
CONCRETE CURB UNDER THREE SIDES.
SCALE: 1/2" = 1"

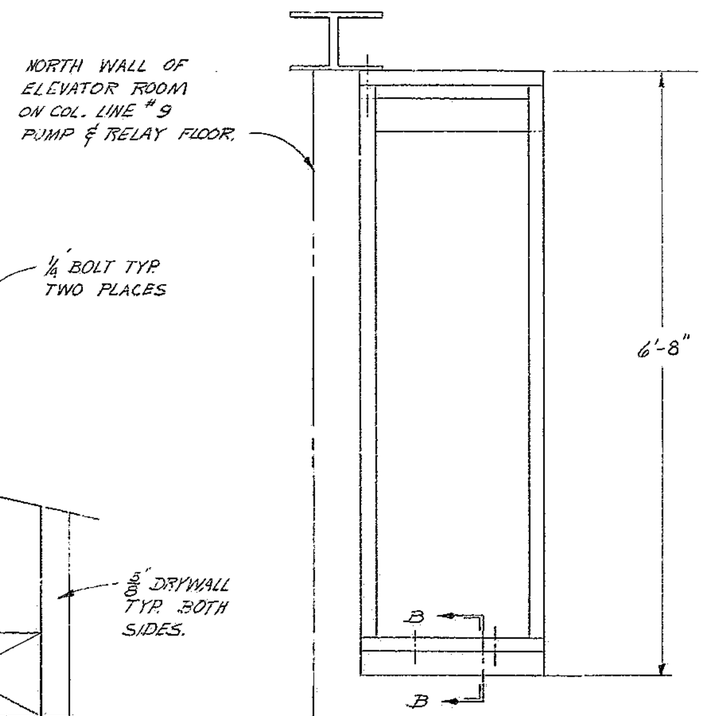

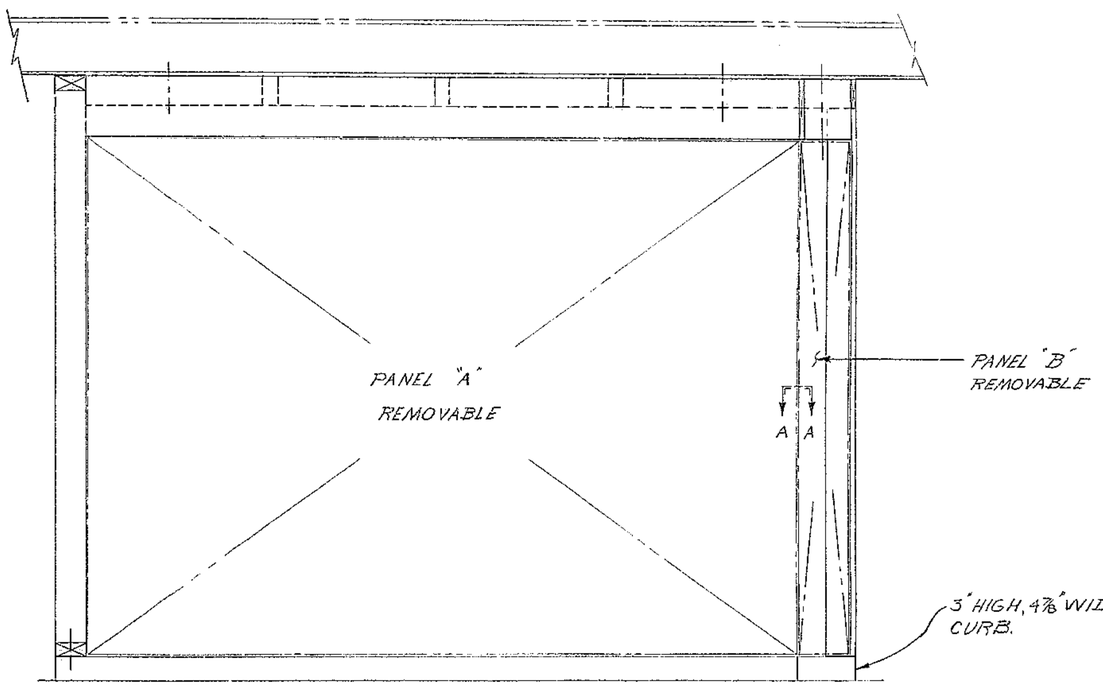

FRONT VIEW
SCALE: 1" = 1'-0"

NOTE: ALL FRAMING MEMBERS 2"X4", EXCEPT NOTED.
5/8" DRYWALL BOTH INSIDE & OUT

NOTE:
FOR LOCATIO
S.O.M. DRA
K.P.N.O. BU

FOR ASSEMBLY SEE

LET.	REVISION	ECR	DATE	BY

TOLERANCES UNLESS OTHERWISE NOTED
DECIMAL DIMENSIONS 00.00 ±.010 00.000 ±.003
FRACTIONAL DIMENSIONS UP TO 18" ± 1/64 18" TO 50" ± 1/32 50" & OVER ± 1/16
BREAK SHARP EDGES
ALL SURFACES TO HAVE 125/ FINISH UNLESS OTHERWISE NOTED.

KITT PEAK NATIONAL OBSE
OPERATED BY THE
ASSOCIATION OF UNIVERSITIES FOR RESEARCH IN A
UNDER CONTRACT WITH
NATIONAL SCIENCE FOUNDAT

150" TELESCOPE

NAME: ELEVATOR NO. 1 MACHINE ROOM EXTENSION — ROOM #400 PUMP & RELAY FLOOR

DESIGNED BY	DATE	APPROVED BY	DATE	DRAWING NUMBER
DAVIS	1-21-70	J.R. Dunn	1-21-70	210
DRAWN BY DAVIS	DATE 1-21-70	APPROVED BY	DATE	
CHECKED BY JRD	DATE 1-23-70	APPROVED BY	DATE	

POST CLEARPRINT 1020