**NOTES:** UNLESS OTHERWISE NOTED
1. REMOVE ALL BURRS AND SHARP EDGES
2. MACHINED SURFACE ROUGHNESS 125

| REVISIONS | | | | | |
|---|---|---|---|---|---|
| ZONE | LTR | DESCRIPTION | ECR | DATE | BY | APVD |

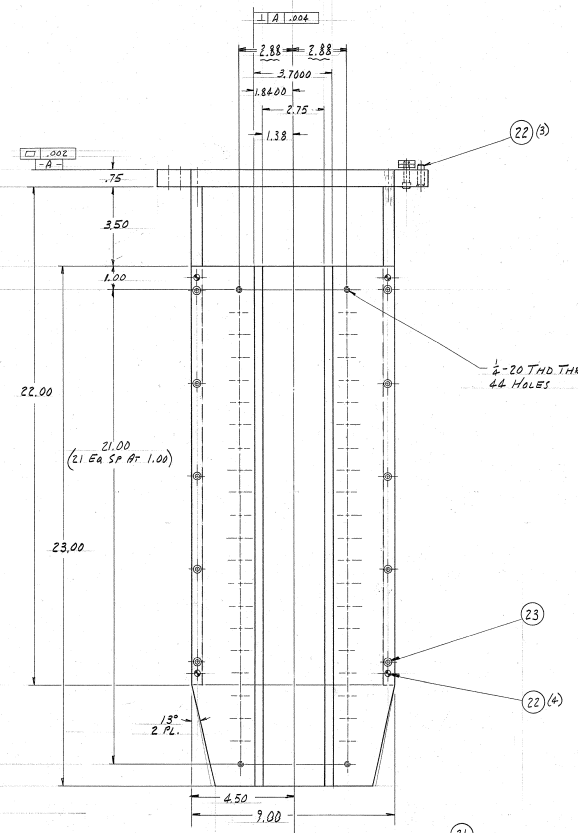


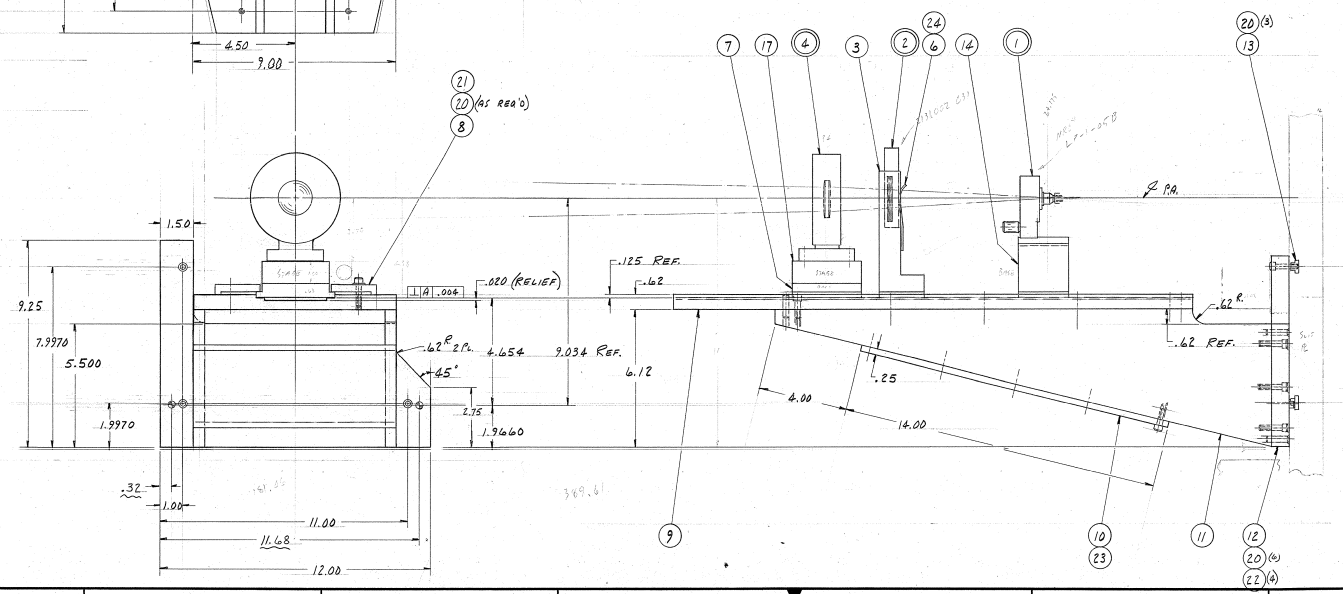


| QTY REQD | PART OR IDENTIFYING NO. | DESCRIPTION | MATERIAL/SPECIFICATION | ZONE | ITEM NO. |
|---|---|---|---|---|---|
| | | | | | 30 |
| | | | | | 29 |
| | | | | | 28 |
| | | | | | 27 |
| | | | | | 26 |
| | | | | | 25 |
| 4 | | 4-40 x 1/4 SOC HD CAP SCR | SST | 4C | 24 |
| 20 | | 1/4-20 x 3/4 SOC HD CAP SCR | SST | 6D, 3A | 23 |
| 11 | | 5/16 x 1 DOWEL | STL | 3A, 4A, 4B | 22 |
| AS REQ'D | | 1/4 FLAT WASHER | SST | 6C | 21 |
| AS REQ'D | | 1/4-20 x 1 SOC HD CAP SCR | SST | 5C, 5C, 3A | 20 |
| | | | | | 19 |
| | | | | | 18 |
| 1 | 420-05 | TRANSLATION STAGE | NEWPORT | 5C | 17 |
| | | | | | 16 |
| | | | | | 15 |
| 1 | 2027.05 B2 | FIBER OPTIC HOLDER BASE | | 4C | 14 |
| 3 | 2027 A 30 | T-NUT, 3/8 SLOT | | 3C | 13 |
| 1 | 2027.05 E1-12 | PLATE, MOUNTING | | 3A | 12 |
| 2 | 2027.05 E1-11 | GUSSET | | 3A | 11 |
| 1 | 2027.05 E1-10 | PLATE, SUPPORT | | 3A | 10 |
| 1 | 2027.05 E1-9 | OPTICS MOUNTING PLATE | | 5A | 9 |
| 6 | 2027.05 A2 | CLAMP | | 6C | 8 |
| 1 | 2027.05 B1 | BASE, LENS HOLDER | | 5C | 7 |
| 2 | 2027.05 A1 | SPRING | | 4C | 6 |
| | | | | | 5 |
| 1 | | LENS HOLDER ASS'Y | | 4C | 4 |
| 1 | 2027.05 B3 | FILTER HOLDER BASE | | 4C | 3 |
| 1 | | FILTER HOLDER ASS'Y | | 4C | 2 |
| 1 | | FIBER OPTIC HOLDER ASS'Y | | 3C | 1 |

PARTS LIST

TOLERANCES
UNLESS OTHERWISE NOTED
DECIMALS: .XX ± .03; .XXX ± .010; .XXXX ± .0030
FRACTIONS: ± —; ANGULAR ± 0° 30'

NEXT ASSEMBLY: 2027.05 E2

2.1 M TEL., COUDE'

**KITT PEAK NATIONAL OBSERVATORY**
OPERATED BY THE ASSOCIATION OF UNIVERSITIES FOR RESEARCH IN ASTRONOMY, INC.
UNDER CONTRACT WITH
NATIONAL SCIENCE FOUNDATION

NAME: FIBER OPTIC IMAGE SCRAMBLER OUTPUT ASS'Y

REF FILE: 2169

SCALE: 1/2

PRINT ISSUED

DRAWN BY: DAVID SMITH 2/20/84
DESIGNED BY: DAVID SMITH 2/20/84
CHECKED BY: DAVID SMITH 2/20/84
APPROVED BY: DATE:
APPROVED BY: DATE:
APPROVED BY: DATE:
CHECKED BY: DATE:
APPROVED BY: DATE:

DWG NO. 2027.05 E1

REV

RELEASE DATE: 2/21/84

DIETZGEN-POST CLEARPRINT 1020